Zfx™ Implant Restorative Components

Product catalog

A COMPANY OF ZimVie

Get connected!

Even more freedom for the user.
Download Zfx libraries free of charge now!

exocad

dental wings

3shape

DIRECT SERVER CONNECTION

Software Update
Compatible with the latest ZimVie / Zfx implant library with Camlog, Dentsply Implants, Megagen, Nobel Biocare, Straumann, Zimmer Biomet …

Zfx

Zfx

Download the entire Zfx libraries free of charge now: **www.zfx-dental.com**

Table of Contents
& Legend

Zimmer Biomet Conical® 12
Zimmer Biomet Certain® 14
Zimmer Biomet External Hex® 16
Zimmer Biomet Eztetic Implant® 18
Zimmer Biomet IOL® 20
Zimmer Biomet Low Profile® 21
Zimmer Biomet Shoulder Abutment® 22
Zimmer Biomet SwissPlus® 24
Zimmer Biomet Tapered Screw-Vent® 26
Zimmer Biomet Tapered Abutment® 28

Anthogyr Axiom® 29
Anthogyr Multi Unit® 29

Biotech Dental Conical abutment® 30
Biotech Dental Kontact® 30

BioHorizons Internal® 31
BioHorizons Multi-Unit® 32

Bredent SKY uni.cone® / SKY fast and fixed® 33
Bredent SKY® 34

Camlog Screw-Line® 36
Camlog VARIO SR® 38

Dentium Superline & Implantium® 39
Dentium Screw Abutment® 39

Dentsply Implants (Astratech) EV® 40
Dentsply Implants Frialit-Xive® 42
Dentsply Implants Multi-Purpose® 44
Dentsply Implants Osseospeed® 46
Dentsply Implants (Astratech) UniAbutment® 48

Global D. Angled conical® 50
Global D. In-Kone 50
Global D. Straight conical® 51
Global D. Twinkon® 51

Megagen AnyOne® 52
Megagen AnyRidge® 53
Megagen EZ Plus® 54
Megagen Multi-Unit Abutment® 56
Megagen Rescue Internal® 58

Microdent Trylogic® 60

MIS Internal Hex® 61
MIS Multi-Unit® 62

Nobel Biocare Active® 64
Nobel Biocare Brånemark® 66
Nobel Biocare Multi-unit® 68
Nobel Biocare Replace® 70

Osstem GS & TS System® 72

P-I Amplified® 74
P-I Conical Abutment® 75
P-I External Hexagon® 76
P-I Morse Taper® 77

Serf Multi DIE® 78
Serf MUA TR WD® 79

Straumann Institut Bone Level® 80
Straumann Institut Multi-Base® 82
Straumann Institut NNC® 83
Straumann Institut Octa® (External Octagon) 84
Straumann Institut Screw-retained® 85
Straumann Institut SynOcta® 86
Straumann Institut SynOcta® Cementable 88

Sweden & Martina Global® 90
Sweden & Martina Outlink2® 91
Sweden & Martina Premium Kohno® 92

Thommen Medical SPI® 94

Note
The representations of the components could differ from the original. The indications relate to the use of the geometry itself and not exclusively on the titanium base.

Ø Diameter

3.0 – 3.9 mm	5.0 – 5.9 mm
4.0 – 4.9 mm	6.0 – 6.9 mm

$\vec{T}$ Torque — Torque for screws

Manufacturer / implant systems	Desktop Scanbody	IOS Scanbody	Titanium based with rotation protection	Titanium based without rotation protection	Pre-Abutment blank	Model analog
Zimmer Biomet						
Conical®	✓	✓		✓		✓
Certain®	✓	✓	✓	✓	✓	✓
External Hex®	✓	✓	✓	✓	✓	✓
Eztetic Implant®	✓				✓	✓
IOL®	✓	✓		✓		✓
Low Profile®	✓	✓		✓		✓
Shoulder Abutment®	✓	✓		✓		✓
SwissPlus®	✓	✓	✓	✓		✓
Tapered Screw-Vent®	✓	✓	✓	✓	✓	✓
Tapered Abutment®	✓	✓		✓		✓
Anthogyr						
Axiom®	✓					
Multi Unit®	✓					
Biotech Dental						
Conical abutment®	✓					
Kontact®	✓					
BioHorizons						
Internal®	✓	✓				✓
Multi-Unit®	✓	✓				
Bredent						
SKY uni.cone® / SKY fast and fixed®	✓	✓		✓		✓
SKY®	✓	✓	✓	✓		✓
Camlog						
Screw-Line®	✓	✓		✓		✓
VARIO SR®	✓	✓	✓			✓
Dentium						
Superline & Implantium®	✓					
Screw Abutment®	✓	✓				
Dentsply Implants						
EV®	✓				✓	
Frialit-Xive®	✓	✓	✓	✓	✓	✓
Multi-Purpose®	✓	✓		✓		✓
Ossesospeed®	✓	✓	✓	✓		✓
UniAbutment®	✓	✓		✓		✓
Global D.						
Angled conical®	✓					
In-Kone	✓					
Straight conical®	✓					
Twinkon®	✓					

Libraries for RealCAD, Exocad, 3Shape and DentalWings are available for all of the listed systems.

Manufacturer / implant systems	Desktop Scanbody	IOS Scanbody	Titanium based with rotation protection	Titanium based without rotation protection	Pre-Abutment blank	Model analog
Megagen						
AnyOne®	✓	✓				
AnyRidge®	✓	✓	✓			✓
EZ Plus®	✓	✓	✓	✓		✓
Multi-Unit Abutment®	✓	✓				
Rescue Internal®	✓	✓	✓	✓		✓
Microdent						
Trylogic®	✓	✓				
MIS						
Internal Hex®	✓	✓				✓
Multi-Unit®	✓					
Nobel Biocare						
Active®	✓	✓	✓	✓	✓	✓
Brånemark®	✓	✓	✓	✓	✓	✓
Multi-unit®	✓	✓		✓		✓
Replace®	✓	✓	✓	✓	✓	✓
Osstem						
GS & TS System®	✓	✓	✓	✓		✓
P-I						
Amplified®	✓	✓				✓
Conical Abutment®	✓	✓				
External Hexagon®	✓	✓				✓
Morse Taper®	✓	✓				✓
Serf						
Multi DIE®	✓					
MUA TR WD®	✓					
Straumann Institut						
Bone Level®	✓	✓	✓	✓	✓	✓
Multi-Base®	✓	✓		✓		✓
Narrow Neck®	✓					
Octa® (External Octagon)	✓					
Screw-retained®	✓	✓				
SynOcta®	✓	✓	✓	✓	✓	✓
SynOcta® Cementable	✓	✓				✓
Sweden & Martina						
Global®	✓	✓				✓
Outlink 2®	✓	✓				✓
Premium Kohno®	✓	✓				✓
Thommen Medical						
SPI®	✓	✓				✓

The values can differ. Up-to-date information can be found in the safety data sheets at www.zfx-dental.com

Zfx Ti-Bases

The Zfx titanium bases are available in different versions, and always provide an optimum implant/abutment connection. Titanium bases with rotation protection are recommended for single-unit restorations; those without rotation protection are indicated when multi-unit restorations are planned. Zfx titanium bases are supplied with titanium screws.

Open system with unlimited possibilities
For the digital production of dentures Zfx counts on open connectivity. Each step of the workflow, from scan to production, enables the integration of third-party or partner systems. 3Shape, Exocad and Dental Wings users can download Zfx libraries with all construction components for free.

3shape
exocad
dental wings

FREE!
Zfx Restorative Libraries download
www.zfx-dental.com

FREE DOWNLOAD
Download now the Zfx Restorative Libraries for free at: www.zfx-dental.com

Regular & Small Design

Creating the ideal emergence profile
Dental implants have become a common restorative option and their use has revolutionized the science of restorative dentistry. The ultimate goal of an implant restoration is to be functional and aesthetic.

The emergence profile plays a crucial role in creating a healthy and natural looking implant supported crown. The final position and shape of the gingival margin can be influenced by changing the contour of the emergence profile and thus modifying the pressure exerted on these tissues.

Optimal aesthetics can be achieved by utilizing the emergence profile to restore the height and shape of the peri-coronal soft tissues whilst long term success is maintained by providing a stable and healthy abutment-to-tissue relationship.

"Small Series" titanium implant interface
With the "small series", Zfx is providing a titanium interface which makes it possible to design a more individual emergence profile with a reduced implant level diameter. The height of the platform on which the final restoration is cemented has also been lowered, creating an even thinner metal margin at the base of the abutment. This has significantly reduced any shadowing showing through the soft tissue, thus enabling the creation of an aesthetically superior abutment.

These "Small Series" range of interfaces are suitable for all indications and provide much needed versatility in the overall design of an implant abutment restoration. They are particularly useful in compromised cases involving thin soft tissue biotypes, tight, fibrous tissue profiles or shallow implant placements where it has been traditionally difficult to achieve ideal results.

The "Regular Series" range of titanium interfaces are still available and are indicated for thicker soft tissue biotypes, where increased soft tissue pressure from a flared emergence profile is indicated to shape and contour the surrounding soft tissue.

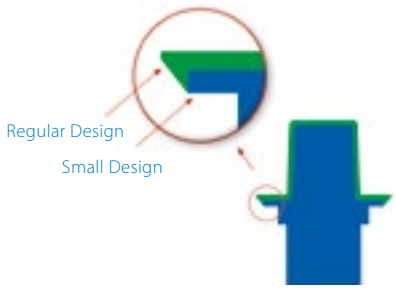

Two different designs offer more possibilites for dentists and patients

Regular Design-Series

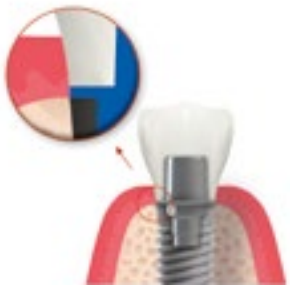

Small Design-Series

Zfx Scan bodies

Zfx Desktop scan body

The scan is the basis of every digitally manufactured restoration. Scan bodies promise the maximum scan accuracy needed. The two-piece Desktop scanbodies for multiple usage are produced with an innovative code system, that enables the automatic recognition of the implant type and prevents application errors. Due to its high accuracy (which is provided by PEEK material), the scanbody is also suitable for scanning implant bridges. All Zfx Desktop Scan bodies have an integrated screw that have to be utilized with the Torque Wrench for Scan bodies. The integrated screws cannot be utilized with the original key of the implant system. Desktop Scan bodies are available in different diameters. Dentists and laboratories which are working with the Zfx Evolution automated workflow, have to consider that for each implant system all diameters are needed.

The **Torque Wrench** is needed to tighten the Zfx desktop scan bodies. It can also be used as a universal wrench (with a width of 1.25 mm) and has a sliding clutch which guarantees the same tightening torque for every match holder.
Art.-No. : ZFX02002067

Torque wrench for Zfx Desktop Scan bodies,
Art.-No.: ZFX02002067

Zfx IOS scan body

The IOS Scan bodies are available in 2 different heights (H4 – 4 mm or H7 – 7 mm) – to accomodate patient implant depth and gingiva height. The scan body H7 has an additional step in order to avoid any confusion between the two heights when designing in the CAD software. A screw with a 1.25 mm HEX is integrated in all Zfx IOS scan bodies.

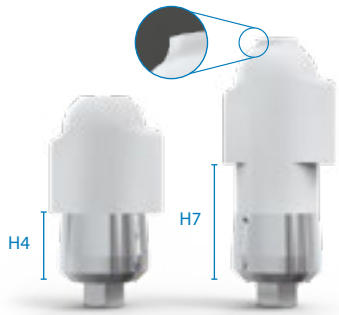

Torque wrench for Zfx desktop scan bodies

The **FUJI** version of the hexagon screwdriver is compatible with all Zfx scan bodies. The three different lengths allow the best possible use for fixing the scan bodies to the patient or the laboratory. You will find more information on page 9.

FUJI (L 21 mm) Art.-No. ZFX02HD12721
FUJI (L 28 mm) Art.-No. ZFX02HD12728
FUJI (L 36 mm) Art.-No. ZFX02HD12736

Zfx Model Analogs

The Model Analogs have to be used for the models, which have been digitally created with the Zfx Digital intraModel system. Locking pins at the side ensure that the model analog is exactly positioned in the model. The Model Analog can also be implemented in a plaster model as usual, using an impression.

The Zfx Digital-intraModel system enables the computer-aided production of physical models based on intraoral scans.

Zfx Pre-milled Abutment Blanks

All Zfx Pre-Abutment Blanks offer the possibility to produce one-piece customized titanium abutments in a time-saving and cost-effective manner in your own lab.

These are compatible with numerous CAM systems (exocad, dental wings, 3shape, …) and can be processed using all open CAM machines (Zfx, imes-icore, Sirona, vhf, Datron and many more).

Zfx Pre-Abutment Multi-Blank Holder allows the positioning and management of up to 12 blocks

Zfx Pre-Abutment Blanks are compatible with Medentika PreFace® Abutment Holders*. (CAM update required!)

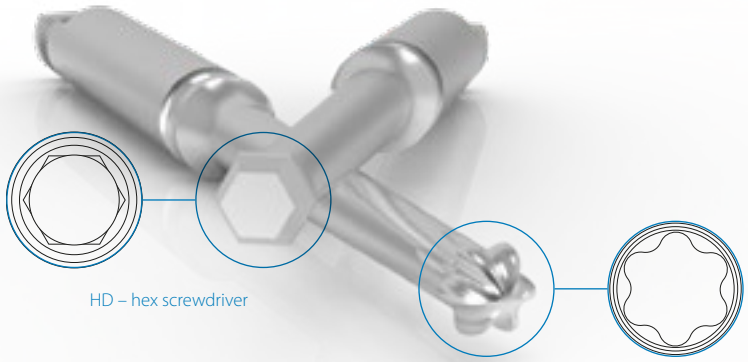

Zfx screwdriver inserts

The Zfx hex / hexalobular screwdriver inserts have an ISO-Latch shank in accordance with the ISO-1797 standard. The use of the screwdriver is validated for use in laboratories and in dental practices. The inserts can be clamped directly into handpieces / angled handpieces or using adapters which allow the clamping of shanks in accordance with ISO 1797.

The screwdrivers are available in three different lengths (21, 28 and 36 mm). Suitable screwdrivers for the respective system are listed on the following pages.

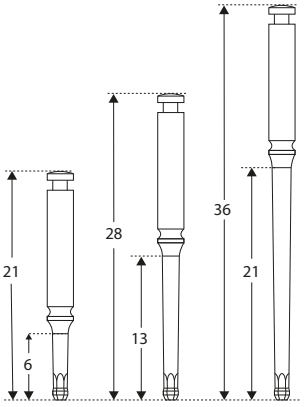

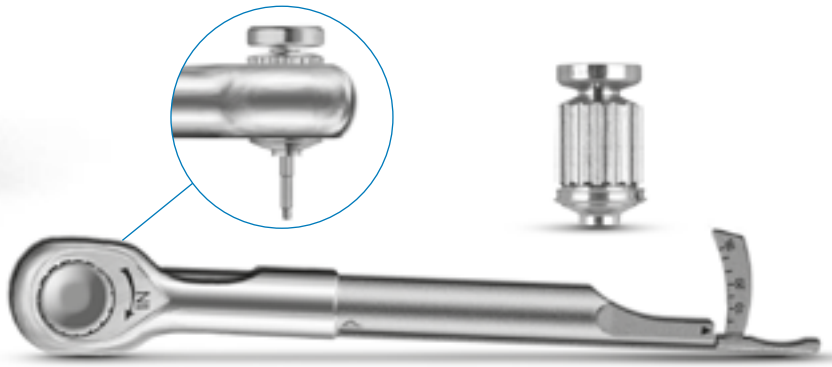

The Zfx hex / hexalobular screwdriver inserts have an ISO Latch shank in accordance with the ISO-1797 standard and are compatible with appropriate angled handpieces.

Zfx torque handpiece for ISO latch shanks
Art.-Nr. ZFX02-TH

Zfx torque handpiece for ISO latch shanks

The Zfx torque handpiece is designed for shanks in accordance with ISO 1797. All Zfx hex / hexalobular screwdriver inserts can therefore be placed. The handpiece is equipped with a three-setting torque from approx. 2.7 – 10 Ncm and is therefore ideal for the different requirements in the laboratory. A pushbutton makes changing the screwdriver inserts quick and easy.

Art.-No. ZFX02-TH

Overview of all Zfx hex / hexalobular screwdriver inserts

Product	Size	Max. angulation	Max. torque (Ncm)	Length (mm)		
				21	28	36
Zfx Hex Screwdriver **EVEREST**	HD 1,00	20°	15		ZFX02HD10028	
Zfx Hex Screwdriver **AORAKI**	HD 1,20	20°	35	ZFX02HD12021	ZFX02HD12028	ZFX02HD12036
Zfx Hex Screwdriver **FUJI**	HD 1,27	20°	40	ZFX02HD12721	ZFX02HD12728	ZFX02HD12736
Zfx Hex Screwdriver **BADILE**	HD 1,30	20°	40	ZFX02HD13321	ZFX02HD13328	ZFX02HD13336
Zfx Hex Screwdriver **DENALI**	HD 1,40	20°	40	ZFX02HD14021	ZFX02HD14028	ZFX02HD14036
Zfx Hex Screwdriver **PISCO**	HD 1,50	20°	40	ZFX02HD15021	ZFX02HD15028	ZFX02HD15036
Zfx Hex Screwdriver **VINSON**	HD 1,60	20°	40	ZFX02HD16021	ZFX02HD16028	ZFX02HD16036
Zfx Hexalobular Screwdriver **EIGER**	HLD 1,54	25°	40	ZFX02HLD15421	ZFX02HLD15428	ZFX02HLD15436
Zfx Hexalobular Screwdriver **JORASSES**	HLD 1,68	25°	40	ZFX02HLD16821	ZFX02HLD16828	ZFX02HLD16836
Zfx Hexalobular Screwdriver **MERU**	HLD 1,80	25°	40	ZFX02HLD18021	ZFX02HLD18028	ZFX02HLD18036

3i-CO Type fitting Zimmer Biomet Conical® abutment system

Scan bodies

	Desktop scan body *including standard screw*	***IOS scan body H4*** *including standard screw*	***IOS scan body H7***
	TWIN PACK	TWIN PACK	TWIN PACK
ø 3.4 mm	EVO-3I-CO-MACH-3.4	INTRA-3I-CO-MACH-3.4-H4	–
Art-No.:	ZFX05002158	ZFX05001925	–
ø 4.1 mm	EVO-3I-CO-MACH-4.1-5.0	INTRA-3I-CO-MACH-4.1-5.0-H4	–
Art-No.:	ZFX05002159	ZFX05001926	–
ø 5.0 mm	EVO-3I-CO-MACH-4.1-5.0	INTRA-3I-CO-MACH-4.1-5.0-H4	–
Art-No.:	ZFX05002159	ZFX05001926	–

Single crown supply / Bridge supply

	Titanium base with rotation protection for single crowns		***Titanium base without rotation protection for bridges*** *small design, including standard screw*
ø 3.4 mm	–	–	S-TI-Base-3I-CO-TBUL-3.4
Art-No.:	–	–	ZFX11002086
ø 4.1 mm	–	–	S-TI-Base-3I-CO-TBUL-4.1-5.0
Art-No.:	–	–	ZFX11002087
ø 5.0 mm	–	–	S-TI-Base-3I-CO-TBUL-4.1-5.0
Art-No.:	–	–	ZFX11002087

*max. possible screw channel angle

Components Accessories

	Pre-Abutment Blank	Replacement screw *standard screw*		Model analog
			T Torque	TWIN PACK
ø3.4 mm	–	3I-CO-SCTI-3.4-6.0	10 Ncm	MC-Analog-3I-CO-3.4
Art-No.:	–	ZFX09001007		ZFX15002289
ø4.1 mm	–	3I-CO-SCTI-3.4-6.0	10 Ncm	MC-Analog-3I-CO-4.1-5.0
Art-No.:	–	ZFX09001007		ZFX15002290
ø5.0 mm	–	3I-CO-SCTI-3.4-6.0	10 Ncm	MC-Analog-3I-CO-4.1-5.0
Art-No.:	–	ZFX09001007		ZFX15002290

Component accessory for directly screwed prosthetics

	Standard screw		Hexalobular screw	
	≤ 20°*		≤ 25°*	
		T Torque		T Torque
ø3.4 mm	3I-CO-SCTI-3.4-6.0	10 Ncm	Zfx Hexalobular Screw 3I-CO, 3I-IO	10 Ncm
Art-No.:	ZFX09001007		ZFX09-3I-CO-HL	
ø4.1 mm	3I-CO-SCTI-3.4-6.0	10 Ncm	Zfx Hexalobular Screw 3I-CO, 3I-IO	10 Ncm
Art-No.:	ZFX09001007		ZFX09-3I-CO-HL	
ø5.0 mm	3I-CO-SCTI-3.4-6.0	10 Ncm	Zfx Hexalobular Screw 3I-CO, 3I-IO	10 Ncm
Art-No.:	ZFX09001007		ZFX09-3I-CO-HL	

Screwdriver

	Standard screw	Hexalobular screw	Scan bodies
ø3.4 mm	AORAKI	MERU	FUJI
ø4.1 mm	AORAKI	MERU	FUJI
ø5.0 mm	AORAKI	MERU	FUJI

Ordering information for screwdrivers from page 8

3i-CE Type fitting Zimmer Biomet Certain® implant system

Scan bodies

	Desktop scan body *including standard screw*	***IOS scan body H4*** *including standard screw*	***IOS scan body H7*** *including standard screw*
	TWIN PACK	TWIN PACK	TWIN PACK
ø 3.4 mm	EVO-3I-CE-MACH-3.4	INTRA-3I-CE-MACH-3.4-H4	INTRA-3I-CE-MACH-3.4-H7
Art-No.:	ZFX05002018	ZFX05001942	ZFX05001943
ø 4.1 mm	EVO-3I-CE-MACH-4.1	INTRA-3I-CE-MACH-4.1-H4	INTRA-3I-CE-MACH-4.1-H7
Art-No.:	ZFX05002019	ZFX05001944	ZFX05001945
ø 5.0 mm	EVO-3I-CE-MACH-5.0	INTRA-3I-CE-MACH-5.0-H4	INTRA-3I-CE-MACH-5.0-H7
Art-No.:	ZFX05002020	ZFX05001946	ZFX05001947
ø 6.0 mm	EVO-3I-CE-MACH-6.0	INTRA-3I-CE-MACH-6.0-H4	INTRA-3I-CE-MACH-6.0-H7
Art-No.:	ZFX05002021	ZFX05001948	ZFX05001949

Single crown supply / Bridge supply

	Titanium base with rotation protection for single crowns		***Titanium base without rotation protection for bridges***	
	regular design, including standard screw	*small design, including standard screw*	*regular design, including standard screw*	*small design, including standard screw*
ø 3.4 mm	TI-Base-3I-CE-TBLO-3.4	S-TI-Base-3I-CE-TBLO-3.4	TI-Base-3I-CE-TBUL-3.4	S-TI-Base-3I-CE-TBUL-3.4
Art-No.:	ZFX11000668	ZFX11001096	ZFX11000672	ZFX11001100
ø 4.1 mm	TI-Base-3I-CE-TBLO-4.1	S-TI-Base-3I-CE-TBLO-4.1	TI-Base-3I-CE-TBUL-4.1	S-TI-Base-3I-CE-TBUL-4.1
Art-No.:	ZFX11000669	ZFX11001097	ZFX11000673	ZFX11001101
ø 5.0 mm	TI-Base-3I-CE-TBLO-5.0	S-TI-Base-3I-CE-TBLO-5.0	TI-Base-3I-CE-TBUL-5.0	S-TI-Base-3I-CE-TBUL-5.0
Art-No.:	ZFX11000670	ZFX11001098	ZFX11000674	ZFX11001102
ø 6.0 mm	–	S-TI-Base-3I-CE-TBLO-6.0	–	S-TI-Base-3I-CE-TBUL-6.0
Art-No.:	–	ZFX11000671	–	ZFX11000675

*max. possible screw channel angle

Components Accessories

	Pre-Abutment Blank *including standard screw*	Replacement screw *standard screw*		Model analog
			Torque	TWIN PACK
ø3.4 mm	Pre-Abutment Blank	3i-CE-SCTI-3.4-6.0	20 Ncm	MC-Analog-3I-CE-3.4
Art-No.:	ZFX18000350	ZFX09000978		ZFX15002116
ø4.1 mm	Pre-Abutment Blank	3i-CE-SCTI-3.4-6.0	20 Ncm	MC-Analog-3I-CE-4.1
Art-No.:	ZFX18000360	ZFX09000978		ZFX15002117
ø5.0 mm	Pre-Abutment Blank	3i-CE-SCTI-3.4-6.0	20 Ncm	MC-Analog-3I-CE-5.0
Art-No.:	ZFX18000360	ZFX09000978		ZFX15002118
ø6.0 mm	Pre-Abutment Blank	3i-CE-SCTI-3.4-6.0	20 Ncm	MC-Analog-3I-CE-6.0
Art-No.:	ZFX18000360	ZFX09000978		ZFX15002119

Component accessory for directly screwed prosthetics

	Standard screw		Standard bridge screw		Hexalobular screw		Hexalobular bridge screw	
	≤ 20°*		≤ 20°*		≤ 25°*		≤ 25°*	
		Torque		Torque		Torque		Torque
ø3.4 mm	3i-CE-SCTI-3.4-6.0	20 Ncm	3I-CE-SCTIUN-3.4-6.0	20 Ncm	HL Screw 3I-CE	20 Ncm	3I-CE	20 Ncm
Art-No.:	ZFX09000978		ZFX09002410		ZFX09-3I-CE-HLE		ZFX09-3I-CE-HLN	
ø4.1 mm	3i-CE-SCTI-3.4-6.0	20 Ncm	3I-CE-SCTIUN-3.4-6.0	20 Ncm	HL Screw 3I-CE	20 Ncm	3I-CE	20 Ncm
Art-No.:	ZFX09000978		ZFX09002410		ZFX09-3I-CE-HLE		ZFX09-3I-CE-HLN	
ø5.0 mm	3i-CE-SCTI-3.4-6.0	20 Ncm	3I-CE-SCTIUN-3.4-6.0	20 Ncm	HL Screw 3I-CE	20 Ncm	3I-CE	20 Ncm
Art-No.:	ZFX09000978		ZFX09002410		ZFX09-3I-CE-HLE		ZFX09-3I-CE-HLN	
ø6.0 mm	3i-CE-SCTI-3.4-6.0	20 Ncm	3I-CE-SCTIUN-3.4-6.0	20 Ncm	HL Screw 3I-CE	20 Ncm	3I-CE	20 Ncm
Art-No.:	ZFX09000978		ZFX09002410		ZFX09-3I-CE-HLE		ZFX09-3I-CE-HLN	

Screwdriver

	Standard screw	Hexalobular screw	Scan bodies
ø3.4 mm	AORAKI	MERU	FUJI
ø4.1 mm	AORAKI	MERU	FUJI
ø5.0 mm	AORAKI	MERU	FUJI
ø6.0 mm	AORAKI	MERU	FUJI

Ordering information for screwdrivers from page 8

3i-OS Type fitting Zimmer Biomet External Hex® implant system

Scan bodies

	Desktop scan body *including standard screw*	***IOS scan body H4*** *including standard screw*	***IOS scan body H7*** *including standard screw*
	TWIN PACK	TWIN PACK	TWIN PACK
ø 3.4 mm	EVO-3I-OS-MACH-3.4	INTRA-3I-OS-MACH-3.4-H4	INTRA-3I-OS-MACH-3.4-H7
Art-No.:	ZFX05002022	ZFX05001950	ZFX05001951
ø 4.1 mm	EVO-3I-OS-MACH-4.1	INTRA-3I-OS-MACH-4.1-H4	INTRA-3I-OS-MACH-4.1-H7
Art-No.:	ZFX05002023	ZFX05001952	ZFX05001953
ø 5.0 mm	EVO-3I-OS-MACH-5.0	INTRA-3I-OS-MACH-5.0-H4	INTRA-3I-OS-MACH-5.0-H7
Art-No.:	ZFX05002024	ZFX05001954	ZFX05001955
ø 6.0 mm	EVO-3I-OS-MACH-6.0	INTRA-3I-OS-MACH-6.0-H4	INTRA-3I-OS-MACH-6.0-H7
Art-No.:	ZFX05002025	ZFX05001956	ZFX05001957

Single crown supply / Bridge supply

	Titanium base with rotation protection for single crowns		***Titanium base without rotation protection for bridges***	
	regular design, including standard screw	*small design, including standard screw*	*regular design, including standard screw*	*small design, including standard screw*
ø 3.4 mm	TI-Base-3I-OS-TBLO-3.4	S-TI-Base-3I-OS-TBLO-3.4	–	S-TI-Base-3I-OS-TBUL-3.4
Art-No.:	ZFX11000676	ZFX11001104	–	ZFX11000680
ø 4.1 mm	TI-Base-3I-OS-TBLO-4.1	S-TI-Base-3I-OS-TBLO-4.1	–	S-TI-Base-3I-OS-TBUL-4.1
Art-No.:	ZFX11000677	ZFX11001105	–	ZFX11000681
ø 5.0 mm	TI-Base-3I-OS-TBLO-5.0	S-TI-Base-3I-OS-TBLO-5.0	–	S-TI-Base-3I-OS-TBUL--5.0
Art-No.:	ZFX11000678	ZFX11001106	–	ZFX11000682
ø 6.0 mm	–	S-TI-Base-3I-OS-TBLO-6.0	–	S-TI-Base-3I-OS-TBUL-6.0
Art-No.:	–	ZFX11000679	–	ZFX11000683

*max. possible screw channel angle

Components Accessories

	Pre-Abutment Blank *including standard screw*	Replacement screw *standard screw*		Model analog
			T Torque	TWIN PACK
ø 3.4 mm	Pre-Abutment Blank	3i-OS-SCTI-3.4-6.0	20 Ncm	MC-Analog-3I-OS-3.4
Art-No.:	ZFX18000370	ZFX09000979		ZFX15002120
ø 4.1 mm	Pre-Abutment Blank	3i-OS-SCTI-3.4-6.0	20 Ncm	MC-Analog-3I-OS-4.1
Art-No.:	ZFX18000380	ZFX09000979		ZFX15002121
ø 5.0 mm	Pre-Abutment Blank	3i-OS-SCTI-3.4-6.0	20 Ncm	MC-Analog-3I-OS-5.0
Art-No.:	ZFX18000380	ZFX09000979		ZFX15002122
ø 6.0 mm	Pre-Abutment Blank	3i-OS-SCTI-3.4-6.0	20 Ncm	MC-Analog-3I-OS-6.0
Art-No.:	ZFX18000380	ZFX09000979		ZFX15002123

Component accessory for directly screwed prosthetics

	Standard screw ≤ 20° *		Hexalobular screw ≤ 25° *	
		T Torque		T Torque
ø 3.4 mm	3i-OS-SCTI-3.4-6.0	20 Ncm	Zfx Hexalobular Screw 3I-OS	20 Ncm
Art-No.:	ZFX09000979		ZFX09-3I-OS-HL	
ø 4.1 mm	3i-OS-SCTI-3.4-6.0	20 Ncm	Zfx Hexalobular Screw 3I-OS	20 Ncm
Art-No.:	ZFX09000979		ZFX09-3I-OS-HL	
ø 5.0 mm	3i-OS-SCTI-3.4-6.0	20 Ncm	Zfx Hexalobular Screw 3I-OS	20 Ncm
Art-No.:	ZFX09000979		ZFX09-3I-OS-HL	
ø 6.0 mm	3i-OS-SCTI-3.4-6.0	20 Ncm	Zfx Hexalobular Screw 3I-OS	20 Ncm
Art-No.:	ZFX09000979		ZFX09-3I-OS-HL	

Screwdriver

	Standard screw	Hexalobular screw	Scan bodies
ø 3.4 mm	AORAKI	MERU	FUJI
ø 4.1 mm	AORAKI	MERU	FUJI
ø 5.0 mm	AORAKI	MERU	FUJI
ø 6.0 mm	AORAKI	MERU	FUJI

Ordering information for screwdrivers from page 8

ZI-EZ Type fitting Zimmer Biomet Eztetic Implant® implant system

Scan bodies

	Desktop scan body *including standard screw*	***IOS scan body H4***	***IOS scan body H7***
	TWIN PACK		
ø3.4 mm	EVO-ZI-EZ-MACH-2.9	–	–
Art-No.:	ZFX05002270	–	–

Components Accessories

	Pre-Abutment Blank *including standard screw*	***Replacement screw*** *standard screw*		***Model analog***
			$\vec{T}$ *Torque*	
ø3.4 mm	Pre-Abutment Blank	ZI-EZ-SCTI-2.9	30 Ncm	–
Art-No.:	ZFX18000420	ZFX09002400		–

*max. possible screw channel angle

Component accessory for directly screwed prosthetics

	Standard screw		Hexalobular screw	
	≤ 20°*	$\vec{T}$ Torque	≤ 25°*	$\vec{T}$ Torque
ø3.4 mm	ZI-EZ-SCTI-2.9	30 Ncm	Hexalobular Screw ZI-EZ	30 Ncm
Art-No.:	ZFX09002400		ZFX09-ZI-EZ-HL	

Screwdriver

	Standard screw	Hexalobular screw	Scan bodies
ø3.4 mm	AORAKI	MERU	FUJI

Ordering information for screwdrivers from page 8

3i-IO Type fitting Zimmer Biomet IOL® abutment system

Scan bodies / Bridge supply

	Desktop scan body *including standard screw*	IOS scan body H4 *including standard screw*	Titanium base without rotation protection for bridges *small design, including standard screw*
	TWIN PACK	TWIN PACK	
ø 4.5 mm	EVO-3I-IO-MACH-4.5	INTRA-3I-IO-MACH-4.5-H4	S-TI-Base-3I-IO-TBUL-4.5
Art-No.:	ZFX05002161	ZFX05001927	ZFX11002089

Components Accessories

	Pre-Abutment Blank	Replacement screw *standard screw*		Model analog
				TWIN PACK
			Torque	
ø 4.5 mm	–	3I-CO-SCTI-3.4-6.0	10 Ncm	MC-Analog-3I-IO-4.5
Art-No.:	–	ZFX09001007		ZFX15002291

Component accessory for directly screwed prosthetics

	Standard screw		Hexalobular screw	
	≤ 20°*		≤ 25°*	
		Torque		Torque
ø 4.5 mm	3I-CO-SCTI-3.4-6.0	10 Ncm	Hexalobular Screw 3I-CO/-IO	10 Ncm
Art-No.:	ZFX09001007		ZFX09-3I-CO-HL	

Screwdriver

	Standard screw	Hexalobular screw	Scan bodies
ø 4.5 mm	AORAKI	MERU	FUJI

Ordering information for screwdrivers from page 8

*max. possible screw channel angle

3i-LO Type fitting Zimmer Biomet Low Profile® abutment system

Scan bodies / Bridge supply

	Desktop scan body *including standard screw*	Desktop scan body with rotation protection *including standard screw*	IOS scan body H4 *including standard screw*	Ti-Base – Non Engaging *small design, including standard screw*
	TWIN PACK		TWIN PACK	
ø 4.5 mm	EVO-3I-LO-MACH-4.8	EVO-3I-LO-HE-MACH-4.8	INTRA-3I-LO-MACH-4.8-H4	S-TI-Base-3I-LO-TBUL-4.8
Art-No.:	ZFX05002162	ZFX05002156	ZFX05001928	ZFX11002090

Components Accessories

	Pre-Abutment Blank	Replacement screw *standard screw*		Model analog
			T Torque	TWIN PACK
ø 4.5 mm	–	3I-LO-SCTI-4.8	10 Ncm	MC-Analog-3I-LO-4.8
Art-No.:	–	ZFX09001008		ZFX15002292

Component accessory for directly screwed prosthetics

	Standard screw		Hexalobular screw	
	≤ 20°*	T Torque	≤ 25°*	T Torque
ø 4.5 mm	3I-LO-SCTI-4.8	10 Ncm	Hexalobular Screw 3I-LO	10 Ncm
Art-No.:	ZFX09001008		ZFX09-3I-LO-HL	

Screwdriver

	Standard screw	Hexalobular screw	Scan bodies
ø 4.5 mm	AORAKI	MERU	FUJI

Ordering information for screwdrivers from page 8

ZI-SH Type fitting Zimmer Biomet Shoulder Abutment® system

Scan bodies

	Desktop scan body *including standard screw*	***IOS scan body H4*** *including standard screw*	***IOS scan body H7***
	TWIN PACK	TWIN PACK	
ø 4.5 mm	EVO-ZI-SH-MACH-4.5	INTRA-ZI-SH-MACH-4.5-H4	–
Art-No.:	ZFX05002171	ZFX05001937	–
ø 6.5 mm	EVO-ZI-SH-MACH-6.5	INTRA-ZI-SH-MACH-6.5-H4	–
Art-No.:	ZFX05002172	ZFX05001938	–

Single crown supply / Bridge supply

	Titanium base with rotation protection for single crowns	***Titanium base without rotation protection for bridges*** *small design, including standard screw*
ø 4.5 mm	–	S-TI-Base-ZI-SH-TBUL-4.5
Art-No.:	–	ZFX11002084
ø 6.5 mm	–	S-TI-Base-ZI-SH-TBUL-6.5
Art-No.:	–	ZFX11002085

*max. possible screw channel angle

Components Accessories

	Pre-Abutment Blank	Replacement screw *standard screw*		Model analog
			$\vec{T}$ Torque	TWIN PACK
ø 4.5 mm	–	ZI-SH-SCTI-4.5-6.5	20 Ncm	MC-Analog-ZI-SH-4.5
Art-No.:	–	ZFX09001006		ZFX15002306
ø 6.5 mm	–	ZI-SH-SCTI-4.5-6.5	20 Ncm	MC-Analog-ZI-SH-6.5
Art-No.:	–	ZFX09001006		ZFX15002307

Component accessory for directly screwed prosthetics

	Standard screw		Hexalobular screw	
	≤ 20°*	$\vec{T}$ Torque	≤ 25°*	$\vec{M}$ Drehmoment
ø 4.5 mm	ZI-SH-SCTI-4.5-6.5	20 Ncm	Hexalobular Screw ZI-SH	20 Ncm
Art-No.:	ZFX09001006		ZFX09-ZI-SH-HL	
ø 6.5 mm	ZI-SH-SCTI-4.5-6.5	20 Ncm	Hexalobular Screw ZI-SH	20 Ncm
Art-No.:	ZFX09001006		ZFX09-ZI-SH-HL	

Screwdriver

	Standard screw	Hexalobular screw	Scan bodies
ø 4.5 mm	FUJI	MERU	FUJI
ø 6.5 mm	FUJI	MERU	FUJI

Ordering information for screwdrivers from page 8

ZI-SW Type fitting Zimmer Biomet SwissPlus® implant system

Scan bodies

	Desktop scan body *including standard screw*	***IOS scan body H4*** *including standard screw*	***IOS scan body H7*** *including standard screw*
	TWIN PACK	TWIN PACK	TWIN PACK
ø 3.8 mm	EVO-ZI-SW-MACH-3.8	INTRA-ZI-SW-MACH-3.8-H4	INTRA-ZI-SW-MACH-3.8-H7
Art-No.:	ZFX05002059	ZFX05002014	ZFX05002015
ø 4.8 mm	EVO-ZI-SW-MACH-4.8	NTRA-ZI-SW-MACH-4.8-H4	INTRA-ZI-SW-MACH-4.8-H7
Art-No.:	ZFX05002060	ZFX05002016	ZFX05002017

Single crown supply / Bridge supply

	Titanium base with rotation protection for single crowns *small design, including standard screw*	***Titanium base without rotation protection for bridges*** *small design, including standard screw*
ø 3.8 mm	S-TI-Base-ZI-SW-TBLO-3.8	S-TI-Base-ZI-SW-TBUL-3.8
Art-No.:	ZFX11001160	ZFX11001162
ø 4.8 mm	S-TI-Base-ZI-SW-TBLO-4.8	S-TI-Base-ZI-SW-TBUL-4.8
Art-No.:	ZFX11001161	ZFX11001163

*max. possible screw channel angle

Components Accessories

	Pre-Abutment Blank	Replacement screw standard screw		Model analog
			T Torque	TWIN PACK
ø 3.8 mm	–	ZI-SW-SCTI-3.8	30 Ncm	MC-Analog-ZI-SW-3.8
Art-No.:	–	ZFX09000987		ZFX15002155
ø 4.8 mm	–	ZI-SW-SCTI-4.8	30 Ncm	MC-Analog-ZI-SW-4.8
Art-No.:	–	ZFX09000988		ZFX15002156

Component accessory for directly screwed prosthetics

	Standard screw		Hexalobular screw	
	≤ 20°*	T Torque	≤ 25°*	T Torque
ø 3.8 mm	ZI-SW-SCTI-3.8	30 Ncm	Hexalobular Screw ZI-SC, ZI-SW-3.8	30 Ncm
Art-No.:	ZFX09000987		ZFX09-ZI-SC-HL	
ø 4.8 mm	ZI-SW-SCTI-4.8	30 Ncm	Hexalobular Screw ZI-SW-4.8	30 Ncm
Art-No.:	ZFX09000988		ZFX09-ZI-SW-48-HL	

Screwdriver

	Standard screw	Hexalobular screw	Scan bodies
ø 3.8 mm	FUJI	MERU	FUJI
ø 4.8 mm	FUJI	MERU	FUJI

Ordering information for screwdrivers from page 8

ZI-SC Type fitting Zimmer Biomet Tapered Screw-Vent® implant system

Scan bodies

	Desktop scan body *including standard screw*	***IOS scan body H4*** *including standard screw*	***IOS scan body H7*** *including standard screw*
	TWIN PACK	TWIN PACK	TWIN PACK
ø 3.5 mm	EVO-ZI-SC-MACH-3.5	INTRA-ZI-SC-MACH-3.5-H4	INTRA-ZI-SC-MACH-3.5-H7
Art-No.:	ZFX05002056	ZFX05001090	ZFX05001093
ø 4.5 mm	EVO-ZI-SC-MACH-4.5	INTRA-ZI-SC-MACH-4.5-H4	INTRA-ZI-SC-MACH-4.5-H7
Art-No.:	ZFX05002057	ZFX05001091	ZFX05001094
ø 5.7 mm	EVO-ZI-SC-MACH-5.7	INTRA-ZI-SC-MACH-5.7-H4	INTRA-ZI-SC-MACH-5.7-H7
Art-No.:	ZFX05002058	ZFX05001092	ZFX05001095

Single crown supply / Bridge supply

	Titanium base with rotation protection for single crowns *regular design, including standard screw*	***Titanium base with rotation protection for single crowns*** *small design, including standard screw*	***Titanium base without rotation protection for bridges*** *regular design, including standard screw*	***Titanium base without rotation protection for bridges*** *small design, including standard screw*
ø 3.5 mm	TI-Base-ZI-SC-TBLO-3.5	S-TI-Base-ZI-SC-TBLO-3.5	TI-Base-ZI-SC-TBUL-3.5	S-TI-Base-ZI-SC-TBUL-3.5
Art-No.:	ZFX11000745	ZFX11001154	ZFX11000748	ZFX11001157
ø 4.5 mm	TI-Base-ZI-SC-TBLO-4.5	S-TI-Base-ZI-SC-TBLO-4.5	TI-Base-ZI-SC-TBUL-4.5	S-TI-Base-ZI-SC-TBUL-4.5
Art-No.:	ZFX11000746	ZFX11001155	ZFX11000749	ZFX11001158
ø 5.7 mm	TI-Base-ZI-SC-TBLO-5.7	S-TI-Base-ZI-SC-TBLO-5.7	TI-Base-ZI-SC-TBUL-5.7	S-TI-Base-ZI-SC-TBUL-5.7
Art-No.:	ZFX11000747	ZFX11001156	ZFX11000750	ZFX11001159

*max. possible screw channel angle

Components Accessories

	Pre-Abutment Blank *including standard screw*	***Replacement screw*** *standard screw*		***Model analog***
			$\vec{T}$ *Torque*	TWIN PACK
ø 3.5 mm	Pre-Abutment Blank	ZI-SC-SCTI-3.5-5.7	30 Ncm	MC-Analog-ZI-SC-3.5
Art-No.:	ZFX18000390	ZFX09000655		ZFX15002152
ø 4.5 mm	Pre-Abutment Blank	ZI-SC-SCTI-3.5-5.7	30 Ncm	MC-Analog-ZI-SC-4.5
Art-No.:	ZFX18000400	ZFX09000655		ZFX15002153
ø 5.7 mm	Pre-Abutment Blank	ZI-SC-SCTI-3.5-5.7	30 Ncm	MC-Analog-ZI-SC-5.7
Art-No.:	ZFX18000410	ZFX09000655		ZFX15002154

Component accessory for directly screwed prosthetics

	Standard screw		***Hexalobular screw***	
	≤ 20°*	$\vec{T}$ *Torque*	≤ 25°*	$\vec{T}$ *Torque*
ø 3.5 mm	ZI-SC-SCTI-3.5-5.7	30 Ncm	Hexalobular Screw ZI-SC, ZI-SW-3.8	30 Ncm
Art-No.:	ZFX09000655		ZFX09-ZI-SC-HL	
ø 4.5 mm	ZI-SC-SCTI-3.5-5.7	30 Ncm	Hexalobular Screw ZI-SC, ZI-SW-3.8	30 Ncm
Art-No.:	ZFX09000655		ZFX09-ZI-SC-HL	
ø 5.7 mm	ZI-SC-SCTI-3.5-5.7	30 Ncm	Hexalobular Screw ZI-SC, ZI-SW-3.8	30 Ncm
Art-No.:	ZFX09000655		ZFX09-ZI-SC-HL	

Screwdriver

	Standard screw	***Hexalobular screw***	***Scan bodies***
ø 3.5 mm	FUJI	MERU	FUJI
ø 4.5 mm	FUJI	MERU	FUJI
ø 5.7 mm	FUJI	MERU	FUJI

Ordering information for screwdrivers from page 8

ZI-TA Type fitting Zimmer Biomet Tapered Abutment® system

Scan bodies / Bridge supply

	Desktop scan body *including standard screw*	IOS scan body H4 *including standard screw*	Titanium base without rotation protection for bridges *small design, including standard screw*
	TWIN PACK	TWIN PACK	
ø 4.5 mm	EVO-ZI-TA-MACH-4.5	INTRA-ZI-TA-MACH-4.5-H4	S-TI-Base-ZI-TA-TBUL-4.5
Art-No.:	ZFX05002157	ZFX05001924	ZFX11002078

Components Accessories

	Pre-Abutment Blank	Replacement screw *standard screw*		Model analog
				TWIN PACK
			Torque	
ø 4.5 mm	–	ZI-TA-SCTI-4.5	20 Ncm	MC-Analog-ZI-TA-4.5
Art-No.:	–	ZFX09000657		ZFX15002305

Component accessory for directly screwed prosthetics

	Standard screw		Hexalobular screw	
	≤ 20°*		≤ 25°*	
		Torque		Torque
ø 4.5 mm	ZI-TA-SCTI-4.5	20 Ncm	Hexalobular Screw ZI-TA	20 Ncm
Art-No.:	ZFX09000657		ZFX09-ZI-TA-HL	

Screwdriver

	Standard screw	Hexalobular screw	Scan bodies
ø 4.5 mm	FUJI	MERU	FUJI

Ordering information for screwdrivers from page 8

*max. possible screw channel angle

AN-AX Type fitting Anthogyr Axiom® implant system

Scan bodies

	Desktop scan body *including standard screw*	***IOS scan body H4***	***IOS scan body H7***
ø 3.4 / 6.0 mm	EVO-AN-AX-MACH-3.4-6.0	–	–
Art-No.:	ZFX05002205	–	–

Screwdriver

	Standard screw	***Hexalobular screw***	***Scan bodies***
ø 3.4 / 6.0 mm	AORAKI	–	FUJI

Ordering information for screwdrivers from page 8

AN-MU Type fitting Anthogyr Multi Unit® abutment system

Scan bodies

	Desktop scan body *including standard screw*	***IOS scan body H4***	***IOS scan body H7***
	TWIN PACK		
ø 4.8 mm	EVO-AN-MU-MACH-4.8	–	–
Art-No.:	ZFX05002206	–	–

Screwdriver

	Standard screw	***Hexalobular screw***	***Scan bodies***
ø 4.8 mm	AORAKI	–	FUJI

Ordering information for screwdrivers from page 8

BD-CO Type fitting Biotech Dental Conical abutment® system

Scan bodies

	Desktop scan body *including standard screw*	***IOS scan body H4***	***IOS scan body H7***
	TWIN PACK		
ø 4.9 mm	EVO-BD-CO-MACH-4.9	–	–
Art-No.:	ZFX05002208	–	–

Screwdriver

	Standard screw		***Scan bodies***
ø 4.9 mm	AORAKI	–	FUJI

Ordering information for screwdrivers from page 8

BD-KO Type fitting Biotech Dental Kontact® implant system

Scan bodies

	Desktop scan body *including standard screw*	***IOS scan body H4***	***IOS scan body H7***
	TWIN PACK		
ø 3.6 / 5.4 mm	EVO-BD-KO-MACH-3.6-5.4	–	–
Art-No.:	ZFX05002207	–	–

Screwdriver

	Standard screw		***Scan bodies***
ø 3.6 / 5.4 mm	AORAKI		FUJI

Ordering information for screwdrivers from page 8

*max. possible screw channel angle

BH-IN Type fitting BioHorizons Internal® implant system

Scan bodies

	Desktop scan body *including standard screw*	***IOS scan body H4*** *including standard screw*	***IOS scan body H7*** *including standard screw*
	TWIN PACK	TWIN PACK	TWIN PACK
ø 3.0 mm	EVO-BH-IN-MACH-3.0	INTRA-BH-IN-MACH-3.0-H4	INTRA-BH-IN-MACH-3.0-H7
Art-No.:	ZFX05D-BH-IN-30	ZFX05I-BH-IN-30-H4	ZFX05I-BH-IN-30-H7
ø 3.5 mm	EVO-BH-IN-MACH-3.5	INTRA-BH-IN-MACH-3.5-H4	INTRA-BH-IN-MACH-3.5-H7
Art-No.:	ZFX05002282	ZFX05002285	ZFX05002288
ø 4.5 mm	EVO-BH-IN-MACH-4.5	INTRA-BH-IN-MACH-4.5-H4	INTRA-BH-IN-MACH-4.5-H7
Art-No.:	ZFX05002283	ZFX05002286	ZFX05002289
ø 5.7 mm	EVO-BH-IN-MACH-5.7	INTRA-BH-IN-MACH-5.7-H4	INTRA-BH-IN-MACH-5.7-H7
Art-No.:	ZFX05002284	ZFX05002287	ZFX05002290

Components Accessories

	Pre-Abutment Blank	***Replacement screw*** *standard screw* ≤ 25°* $\vec{T}$ *Torque*		***Model analog*** TWIN PACK
ø 3.0 mm	–	TI-Screw-BH-IN	30 Ncm	–
Art-No.:	–	ZFX09-BH-IN-HL		–
ø 3.5 mm	–	TI-Screw-BH-IN	30 Ncm	MC-Analog-BH-IN-3.5
Art-No.:	–	ZFX09-BH-IN-HL		ZFX15002331
ø 4.5 mm	–	TI-Screw-BH-IN	30 Ncm	MC-Analog-BH-IN-4.5
Art-No.:	–	ZFX09-BH-IN-HL		ZFX15002332
ø 5.7 mm	–	TI-Screw-BH-IN	30 Ncm	MC-Analog-BH-IN-5.7
Art-No.:	–	ZFX09-BH-IN-HL		ZFX15002333

Screwdriver

	Standard screw	***Hexalobular screw***	***Scan bodies***
ø 3.0 mm	FUJI	–	FUJI
ø 3.5 mm	FUJI	–	FUJI
ø 4.5 mm	FUJI	–	FUJI
ø 5.7 mm	FUJI	–	FUJI

Ordering information for screwdrivers from page 8

BH-MU Type fitting BioHorizons Multi-Unit® implant system

Scan bodies

	Desktop scan body *including standard screw*	***IOS scan body H4*** *including standard screw*	***IOS scan body H7***
	TWIN PACK	TWIN PACK	
ø 4.8 mm	EVO-BH-MU-MACH-4.8	INTRA-BH-MU-MACH-4.8-H4	–
Art-No.:	ZFX05D-BH-MU-48	ZFX05I-BH-MU-48-H4	–

Screwdriver

	Standard screw	***Hexalobular screw***	***Scan bodies***
ø 4.8 mm	FUJI	–	FUJI

Ordering information for screwdrivers from page 8

*max. possible screw channel angle

BR-MU Type fitting Bredent SKY uni.cone® / SKY fast and fixed® abutment system

Scan bodies / Bridge supply

	Desktop scan body *including standard screw*	IOS scan body H4 *including standard screw*	Titanium base without rotation protection for bridges *small design, including standard screw*
	TWIN PACK	TWIN PACK	
ø 4.5 mm	EVO-BR-MU-MACH-4.5	INTRA-BR-MU-MACH-4.5-H4	S-TI-Base-BR-MU-TBUL-4.5
Art-No.:	ZFX05002061	ZFX05001150	ZFX11002199
ø 5.6 mm	EVO-BR-MU-MACH-5.6	INTRA-BR-MU-MACH-5.6-H4	S-TI-Base-BR-MU-TBUL-5.6
Art-No.:	ZFX05002179	ZFX05001939	ZFX11002196

Components Accessories

	Pre-Abutment Blank	Replacement screw *standard screw*		Model analog
		≤ 25°*		TWIN PACK
			$\vec{T}$ Torque	
ø 4.5 mm	–	BR-MU-SCTI-4.5-5.6	18 Ncm	MC-Analog-BR-MU-4.5
Art-No.:	–	ZFX09002186		ZFX15002329
ø 5.6 mm	–	BR-MU-SCTI-4.5-5.6	18 Ncm	MC-Analog-BR-MU-5.6
Art-No.:	–	ZFX09002186		ZFX15002330

Screwdriver

	Standard screw	Hexalobular screw	Scan bodies
ø 4.5 mm	JORASSES	–	FUJI
ø 5.6 mm	JORASSES	–	FUJI

Ordering information for screwdrivers from page 8

BR-SK Type fitting Bredent SKY® implant system

Scan bodies

	Desktop scan body *including standard screw*	***IOS scan body H4*** *including standard screw*	***IOS scan body H7*** *including standard screw*
	TWIN PACK	TWIN PACK	TWIN PACK
ø 3.5 mm	EVO-BR-SK-MACH-3.5	INTRA-BR-SK-MACH-3.5-H4	INTRA-BR-SK-MACH-3.5-H7
Art-No.:	ZFX05002256	ZFX05001132	ZFX05001133
ø 4.0 mm	EVO-BR-SK-MACH-4.0	INTRA-BR-SK-MACH-4.0-H4	INTRA-BR-SK-MACH-4.0-H7
Art-No.:	ZFX05002178	ZFX05001102	ZFX05001103

Single crown supply / Bridge supply

	Titanium base with rotation protection for single crowns *small design, including standard screw*	***Titanium base without rotation protection for bridges*** *small design, including standard screw*
ø 3.5 mm	S-TI-Base-BR-SK-TBLO-3.5	S-TI-Base-BR-SK-TBUL-3.5
Art-No.:	ZFX11002205	ZFX11002207
ø 4.0 mm	S-TI-Base-BR-SK-TBLO-4.0	S-TI-Base-BR-SK-TBUL-4.0
Art-No.:	ZFX11002194	ZFX11002195

*max. possible screw channel angle

Components Accessories

	Pre-Abutment Blank	Replacement screw *standard screw*		Model analog
			$\vec{T}$ Torque	TWIN PACK
ø 3.5 mm	–	BR-SK-SCTI-3.5-4.0	25 Ncm	MC-Analog-BR-SK-3.5
Art-No.:	–	ZFX09002185		ZFX15002327
ø 4.0 mm	–	BR-SK-SCTI-3.5-4.0	25 Ncm	MC-Analog-BR-SK-4.0
Art-No.:	–	ZFX09002185		ZFX15002328

Component accessory for directly screwed prosthetics

	Standard screw		Hexalobular screw
	≤ 25°*	$\vec{T}$ Torque	
ø 3.5 mm	BR-SK-SCTI-3.5-4.0	25 Ncm	–
Art-No.:	ZFX09002185		–
ø 4.0 mm	BR-SK-SCTI-3.5-4.0	25 Ncm	–
Art-No.:	ZFX09002185		–

Screwdriver

	Standard screw	Hexalobular screw	Scan bodies
ø 3.5 mm	JORASSES	–	FUJI
ø 4.0 mm	JORASSES	–	FUJI

Ordering information for screwdrivers from page 8

CA-CA Type fitting Camlog Screw-Line® implant system

Scan bodies

	Desktop scan body *including standard screw*	***IOS scan body H4*** *including standard screw*	***IOS scan body H7*** *including standard screw*
	TWIN PACK	TWIN PACK	TWIN PACK
ø 3.3 mm	EVO-CA-CA-MACH-3.3	INTRA-CA-CA-MACH-3.3-H4	INTRA-CA-CA-MACH-3.3-H7
Art-No.:	ZFX05002029	ZFX05001964	ZFX05001965
ø 3.8 mm	EVO-CA-CA-MACH-3.8	INTRA-CA-CA-MACH-3.8-H4	INTRA-CA-CA-MACH-3.8-H7
Art-No.:	ZFX05002030	ZFX05001966	ZFX05001967
ø 4.3 mm	EVO-CA-CA-MACH-4.3	INTRA-CA-CA-MACH-4.3-H4	INTRA-CA-CA-MACH-4.3-H7
Art-No.:	ZFX05002031	ZFX05001968	ZFX05001969
ø 5.0 mm	EVO-CA-CA-MACH-5.0	INTRA-CA-CA-MACH-5.0-H4	INTRA-CA-CA-MACH-5.0-H7
Art-No.:	ZFX05002032	ZFX05001970	ZFX05001971
ø 6.0 mm	EVO-CA-CA-MACH-6.0	INTRA-CA-CA-MACH-6.0-H4	INTRA-CA-CA-MACH-6.0-H7
Art-No.:	ZFX05002033	ZFX05001972	ZFX05001973

Single crown supply / Bridge supply

	Titanium base with rotation protection for single crowns	***Titanium base without rotation protection for bridges*** *small design, including standard screw*
ø 3.3 mm	–	S-TI-Base-CA-CA-TBUL-3.3
Art-No.:	–	ZFX11002208
ø 3.8 mm	–	S-TI-Base-CA-CA-TBUL-3.8
Art-No.:	–	ZFX11002209
ø 4.3 mm	–	S-TI-Base-CA-CA-TBUL-4.3
Art-No.:	–	ZFX11002210
ø 5.0 mm	–	S-TI-Base-CA-CA-TBUL-5.0
Art-No.:	–	ZFX11002211
ø 6.0 mm	–	S-TI-Base-CA-CA-TBUL-6.0
Art-No.:	–	ZFX11002212

*max. possible screw channel angle

Components Accessories

	Pre-Abutment Blank	Replacement screw standard screw		Model analog
			T Torque	TWIN PACK
ø 3.3 mm	–	CA-CA-SCTI-3.3-4.3	20 Ncm	MC-Analog-CA-CA-3.3
Art-No.:	–	ZFX09002323		ZFX15002127
ø 3.8 mm	–	CA-CA-SCTI-3.3-4.3	20 Ncm	MC-Analog-CA-CA-3.8
Art-No.:	–	ZFX09002323		ZFX15002128
ø 4.3 mm	–	CA-CA-SCTI-3.3-4.3	20 Ncm	MC-Analog-CA-CA-4.3
Art-No.:	–	ZFX09002323		ZFX15002129
ø 5.0 mm	–	CA-CA-SCTI-5.0-6.0	20 Ncm	MC-Analog-CA-CA-5.0
Art-No.:	–	ZFX09002324		ZFX15002130
ø 6.0 mm	–	CA-CA-SCTI-5.0-6.0	20 Ncm	MC-Analog-CA-CA-6.0
Art-No.:	–	ZFX09002324		ZFX15002131

Component accessory for directly screwed prosthetics

	Standard screw		Hexalobular screw
	≤ 20°*	T Torque	
ø 3.3 mm	CA-CA-SCTI-3.3-4.3	20 Ncm	–
Art-No.:	ZFX09002323		–
ø 3.8 mm	CA-CA-SCTI-3.3-4.3	20 Ncm	–
Art-No.:	ZFX09002323		–
ø 4.3 mm	CA-CA-SCTI-3.3-4.3	20 Ncm	–
Art-No.:	ZFX09002323		–
ø 5.0 mm	CA-CA-SCTI-5.0-6.0	20 Ncm	–
Art-No.:	ZFX09002324		–
ø 6.0 mm	CA-CA-SCTI-5.0-6.0	20 Ncm	–
Art-No.:	ZFX09002324		–

Screwdriver

	Standard screw	Hexalobular screw	Scan bodies
ø 3.3 mm	FUJI	–	FUJI
ø 3.8 mm	FUJI	–	FUJI
ø 4.3 mm	FUJI	–	FUJI
ø 5.0 mm	FUJI	–	FUJI
ø 6.0 mm	FUJI	–	FUJI

Ordering information for screwdrivers from page 8

CA-VA Type fitting Camlog VARIO SR® Abutment system

Scan bodies / Single crown supply

	Desktop scan body *including standard screw*	IOS scan body H4 *including standard screw*	Titanium base with rotation protection for single crowns *small design, including standard screw*
	TWIN PACK	TWIN PACK	
ø3.8 / 4.3 mm	EVO-CA-VA-MACH-3.8-4.3	INTRA-CA-VA-MACH-3.8-4.3-H4	S-TI-Base-CA-VA-TBUL-3.8-4.3
Art-No.:	ZFX05002180	ZFX05001940	ZFX11002197
ø5.0 / 6.0 mm	EVO-CA-VA-MACH-5.0-6.0	INTRA-CA-VA-MACH-5.0-6.0-H4	S-TI-Base-CA-VA-TBUL-5.0-6.0
Art-No.:	ZFX05002181	ZFX05001941	ZFX11002198

Components Accessories

	Pre-Abutment Blank	Replacement screw *standard screw*		Model analog
			T Torque	TWIN PACK
ø3.8 / 4.3 mm	–	CA-VA-SCTI-3.8-6.0	15 Ncm	MC-Analog-CA-VA-3.8-4.3
Art-No.:	–	ZFX09002187		ZFX15002295
ø5.0 / 6.0 mm	–	CA-VA-SCTI-3.8-6.0	15 Ncm	MC-Analog-CA-VA-5.0-6.0
Art-No.:	–	ZFX09002187		ZFX15002296

Component accessory for directly screwed prosthetics

	Standard screw		Hexalobular screw	
	≤ 20°*	T Torque	≤ 25°*	T Torque
ø3.8 / 4.3 mm	CA-VA-SCTI-3.8-6.0	15 Ncm		Ncm
Art-No.:	ZFX09002187			
ø5.0 / 6.0 mm	CA-VA-SCTI-3.8-6.0	15 Ncm		
Art-No.:	ZFX09002187			

Screwdriver

	Standard screw		Scan bodies
ø3.8 / 4.3 mm	FUJI	–	FUJI
ø5.0 / 6.0 mm	FUJI	–	FUJI

Ordering information for screwdrivers from page 8

*max. possible screw channel angle

DU-SU Type fitting Dentium Superline & Implantium® implant system

Scan bodies

	Desktop scan body *including standard screw*		
	TWIN PACK		
ø3.6/7.0 mm	EVO-DU-SU-MACH-3.6-7.0		
Art-No.:	ZFX05002200		

Screwdriver

	Standard screw		***Scan bodies***
ø3.6/7.0 mm	FUJI		FUJI

Ordering information for screwdrivers from page 8

DU-SA Type fitting Dentium Screw Abutment® implant system

Scan bodies

	Desktop scan body *including standard screw*	***IOS scan body H4*** *including standard screw*	
	TWIN PACK	TWIN PACK	
ø4.5/5.5 mm	EVO-DU-SA-MACH-4.5-5.5	INTRA-DU-SA-MACH-4.5-5.5-H4	
Art-No.:	ZFX05D-DU-SA-4555	ZFX05I-DU-SA-4555-H4	

Screwdriver

	Standard screw		***Scan bodies***
ø4.5/5.5 mm	FUJI		FUJI

Ordering information for screwdrivers from page 8

AS-EV Type fitting Dentsply Implants (Astratech) EV® implant system

Scan bodies

	Desktop scan body *including standard screw*	***IOS scan body H4***	***IOS scan body H7***
	TWIN PACK		
ø 3.0 mm	EVO-AS-EV-MACH-3.0	–	–
Art-No.:	ZFX05002186	–	–
ø 3.6 mm	EVO-AS-EV-MACH-3.6	–	–
Art-No.:	ZFX05002188	–	–
ø 4.2 mm	EVO-AS-EV-MACH-4.2	–	–
Art-No.:	ZFX05002190	–	–
ø 4.8 mm	EVO-AS-EV-MACH-4.8	–	–
Art-No.:	ZFX05002192	–	–
ø 5.4 mm	EVO-AS-EV-MACH-5.4	–	–
Art-No.:	ZFX05002194	–	–

Components Accessories

	Pre-Abutment Blank *including standard screw*	***Replacement screw*** *standard screw*		
			$\vec{T}$ Torque	
ø 3.0 mm	Pre-Abutment Blank	AS-EV-SCTI-3.0	25 Ncm	–
Art-No.:	ZFX18000300	ZFX09002330		–
ø 3.6 mm	Pre-Abutment Blank	AS-EV-SCTI-3.6	25 Ncm	–
Art-No.:	ZFX18000310	ZFX09002331		–
ø 4.2 mm	Pre-Abutment Blank	AS-EV-SCTI-4.2	25 Ncm	–
Art-No.:	ZFX18000320	ZFX09002332		–
ø 4.8 mm	Pre-Abutment Blank	AS-EV-SCTI-4.8-5.4	25 Ncm	–
Art-No.:	ZFX18000330	ZFX09002333		–
ø 5.4 mm	Pre-Abutment Blank	AS-EV-SCTI-4.8-5.4	25 Ncm	–
Art-No.:	ZFX18000340	ZFX09002333		–

*max. possible screw channel angle

Component accessory for directly screwed prosthetics

	Standard screw		Hexalobular screw
	≤ 20°*	T Torque	
ø 3.0 mm	AS-EV-SCTI-3.0	25 Ncm	–
Art-No.:	ZFX09002330		–
ø 3.6 mm	AS-EV-SCTI-3.6	25 Ncm	–
Art-No.:	ZFX09002331		–
ø 4.2 mm	AS-EV-SCTI-4.2	25 Ncm	–
Art-No.:	ZFX09002332		–
ø 4.8 mm	AS-EV-SCTI-4.8-5.4	25 Ncm	–
Art-No.:	ZFX09002333		–
ø 5.4 mm	AS-EV-SCTI-4.8-5.4	25 Ncm	–
Art-No.:	ZFX09002333		–

Screwdriver

	Standard screw	Hexalobular screw	Scan bodies
ø 3.0 mm	FUJI	–	FUJI
ø 3.6 mm	FUJI	–	FUJI
ø 4.2 mm	FUJI	–	FUJI
ø 4.8 mm	FUJI	–	FUJI
ø 5.4 mm	FUJI	–	FUJI

Ordering information for screwdrivers from page 8

DE-XI Type fitting Dentsply Implants Frialit-Xive® implant system

Scan bodies

	Desktop scan body *including standard screw*	***IOS scan body H4*** *including standard screw*	***IOS scan body H7*** *including standard screw*
	TWIN PACK	TWIN PACK	TWIN PACK
ø 3.0 mm	EVO-DE-XI-MACH-3.0	INTRA-DE-XI-MACH-3.0-H4	INTRA-DE-XI-MACH-3.0-H7
Art-No.:	ZFX05002034	ZFX05001974	ZFX05001975
ø 3.4 mm	EVO-DE-XI-MACH-3.4	INTRA-DE-XI-MACH-3.4-H4	INTRA-DE-XI-MACH-3.4-H7
Art-No.:	ZFX05002035	ZFX05001976	ZFX05001977
ø 3.8 mm	EVO-DE-XI-MACH-3.8	INTRA-DE-XI-MACH-3.8-H4	INTRA-DE-XI-MACH-3.8-H7
Art-No.:	ZFX05002036	ZFX05001978	ZFX05001979
ø 4.5 mm	EVO-DE-XI-MACH-4.5	INTRA-DE-XI-MACH-4.5-H4	INTRA-DE-XI-MACH-4.5-H7
Art-No.:	ZFX05002037	ZFX05001980	ZFX05001981
ø 5.5 mm	EVO-DE-XI-MACH-5.5	INTRA-DE-XI-MACH-5.5-H4	INTRA-DE-XI-MACH-5.5-H7
Art-No.:	ZFX05002038	ZFX05001982	ZFX05001983
ø 6.5 mm	EVO-DE-XI-MACH-6.5	INTRA-DE-XI-MACH-6.5-H4	INTRA-DE-XI-MACH-6.5-H7
Art-No.:	ZFX05002039	ZFX05001984	ZFX05001985

Single crown supply / Bridge supply

	Titanium base with rotation protection for single crowns		***Titanium base without rotation protection for bridges***	
	regular design, including standard screw	*small design, including standard screw*	*regular design, including standard screw*	*small design, including standard screw*
ø 3.0 mm	–	S-TI-Base-DE-XI-TBLO-3.0	–	S-TI-Base-DE-XI-TBUL-3.0
Art-No.:	–	ZFX11000696	–	ZFX11000702
ø 3.4 mm	TI-Base-DE-XI-TBLO-3.4	S-TI-Base-DE-XI-TBLO-3.4	TI-Base-DE-XI-TBUL-3.4	S-TI-Base-DE-XI-TBUL-3.4
Art-No.:	ZFX11000697	ZFX11001119	ZFX11000703	ZFX11001125
ø 3.8 mm	TI-Base-DE-XI-TBLO-3.8	S-TI-Base-DE-XI-TBLO-3.8	TI-Base-DE-XI-TBUL-3.8	S-TI-Base-DE-XI-TBUL-3.8
Art-No.:	ZFX11000698	ZFX11001120	ZFX11000704	ZFX11001126
ø 4.5 mm	TI-Base-DE-XI-TBLO-4.5	S-TI-Base-DE-XI-TBLO-4.5	TI-Base-DE-XI-TBUL-4.5	S-TI-Base-DE-XI-TBUL-4.5
Art-No.:	ZFX11000699	ZFX11001121	ZFX11000705	ZFX11001127
ø 5.5 mm	TI-Base-DE-XI-TBLO-5.5	S-TI-Base-DE-XI-TBLO-5.5	TI-Base-DE-XI-TBUL-5.5	S-TI-Base-DE-XI-TBUL-5.5
Art-No.:	ZFX11000700	ZFX11001122	ZFX11000706	ZFX11001128
ø 6.5 mm	–	S-TI-Base-DE-XI-TBLO-6.5	–	S-TI-Base-DE-XI-TBUL-6.5
Art-No.:	–	ZFX11000701	–	ZFX11000707

*max. possible screw channel angle

Components Accessories

	Pre-Abutment Blank *including standard screw*	Replacement screw *standard screw*		Model analog
			$\vec{T}$ Torque	TWIN PACK
ø3.0 mm	Pre-Abutment Blank	DE-XI-SCTI-3.0	24 Ncm	MC-Analog-DE-XI-3.0
Art-No.:	ZFX18000260	ZFX09000620		ZFX15002132
ø3.4 mm	Pre-Abutment Blank	DE-XI-SCTI-3.4-6.5	24 Ncm	MC-Analog-DE-XI-3.4
Art-No.:	ZFX18000270	ZFX09000621		ZFX15002133
ø3.8 mm	Pre-Abutment Blank	DE-XI-SCTI-3.4-6.5	24 Ncm	MC-Analog-DE-XI-3.8
Art-No.:	ZFX18000280	ZFX09000621		ZFX15002134
ø4.5 mm	Pre-Abutment Blank	DE-XI-SCTI-3.4-6.5	24 Ncm	MC-Analog-DE-XI-4.5
Art-No.:	ZFX18000290	ZFX09000621		ZFX15002135
ø5.5 mm	Pre-Abutment Blank	DE-XI-SCTI-3.4-6.5	24 Ncm	MC-Analog-DE-XI-5.5
Art-No.:	ZFX18000290	ZFX09000621		ZFX15002136
ø6.5 mm	Pre-Abutment Blank	DE-XI-SCTI-3.4-6.5	24 Ncm	–
Art-No.:	ZFX18000290	ZFX09000621		–

Component accessory for directly screwed prosthetics

	Standard screw		Hexalobular screw
	≤ 20°*	$\vec{T}$ Torque	
ø3.0 mm	DE-XI-SCTI-3.0	24 Ncm	–
Art-No.:	ZFX09000620		–
ø3.4 mm	DE-XI-SCTI-3.4-6.5	24 Ncm	–
Art-No.:	ZFX09000621		–
ø3.8 mm	DE-XI-SCTI-3.4-6.5	24 Ncm	–
Art-No.:	ZFX09000621		–
ø4.5 mm	DE-XI-SCTI-3.4-6.5	24 Ncm	–
Art-No.:	ZFX09000621		–
ø5.5 mm	DE-XI-SCTI-3.4-6.5	24 Ncm	–
Art-No.:	ZFX09000621		–
ø6.5 mm	DE-XI-SCTI-3.4-6.5	24 Ncm	–
Art-No.:	ZFX09000621		–

Screwdriver

	Standard screw	Hexalobular screw	Scan bodies
ø3.0 mm	AORAKI	–	FUJI
ø3.4 mm	AORAKI	–	FUJI
ø3.8 mm	AORAKI	–	FUJI
ø4.5 mm	AORAKI	–	FUJI
ø5.5 mm	AORAKI	–	FUJI
ø6.5 mm	AORAKI	–	FUJI

Ordering information for screwdrivers from page 8

DE-MU Type fitting Dentsply Implants Multi-Purpose® abutment system

Scan bodies

	Desktop scan body *including standard screw*	***IOS scan body H4*** *including standard screw*	***IOS scan body H7***
	TWIN PACK	TWIN PACK	
3,4 – 3,8 mm	EVO-DE-MU-MACH-3.4-3.8	INTRA-DE-MU-MACH-3.4-3.8-H4	–
Art-No.:	ZFX05002165	ZFX05001931	–
4,5 mm	EVO-DE-MU-MACH-4.5	INTRA-DE-MU-MACH-4.5-H4	–
Art-No.:	ZFX05002166	ZFX05001932	–
5,5mm	EVO-DE-MU-MACH-5.5	INTRA-DE-MU-MACH-5.5-H4	–
Art-No.:	ZFX05002167	ZFX05001933	–

Single crown supply / Bridge supply

	Titanium base with rotation protection for single crowns	***Titanium base without rotation protection for bridges*** *small design, including standard screw*
3,4 – 3,8 mm	–	S-TI-Base-DE-MU-TBUL-3.4-3.8
Art-No.:	–	ZFX11002093
4,5 mm	–	S-TI-Base-DE-MU-TBUL-4.5
Art-No.:	–	ZFX11002094
5,5mm	–	S-TI-Base-DE-MU-TBUL-5.5
Art-No.:	–	ZFX11002095

*max. possible screw channel angle

Components Accessories

	Pre-Abutment Blank	Replacement screw standard screw		Model analog
			T Torque	TWIN PACK
3,4 – 3,8 mm	–	DE-MU-SCTI-3.4-5.5	24 Ncm	MC-Analog-DE-MU-3.4-3.8
Art-No.:	–	ZFX09001010		ZFX15002297
4,5 mm	–	DE-MU-SCTI-3.4-5.5	24 Ncm	MC-Analog-DE-MU-4.5
Art-No.:	–	ZFX09001010		ZFX15002298
5,5mm	–	DE-MU-SCTI-3.4-5.5	24 Ncm	MC-Analog-DE-MU-5.5
Art-No.:	–	ZFX09001010		ZFX15002299

Component accessory for directly screwed prosthetics

	Standard screw		Hexalobular screw
	≤ 20°*	T Torque	
3,4 – 3,8 mm	DE-MU-SCTI-3.4-5.5	24 Ncm	–
Art-No.:	ZFX09001010		–
4,5 mm	DE-MU-SCTI-3.4-5.5	24 Ncm	–
Art-No.:	ZFX09001010		–
5,5mm	DE-MU-SCTI-3.4-5.5	24 Ncm	–
Art-No.:	ZFX09001010		–

Screwdriver

	Standard screw	Hexalobular screw	Scan bodies
3,4 – 3,8 mm	AORAKI	–	FUJI
4,5 mm	AORAKI	–	FUJI
5,5mm	AORAKI	–	FUJI

Ordering information for screwdrivers from page 8

AS-OS Type fitting Dentsply Implants Osseospeed® implant system

Scan bodies

	Desktop scan body *including standard screw*	***IOS scan body H4*** *including standard screw*	***IOS scan body H7*** *including standard screw*
	TWIN PACK	TWIN PACK	TWIN PACK
ø 3.0 mm	EVO-AS-OS-MACH-3.0	INTRA-AS-OS-MACH-3.0-H4	INTRA-AS-OS-MACH-3.0-H7
Art-No.:	ZFX05002026	ZFX05001958	ZFX05001959
ø 3.5 / 4.0 mm	EVO-AS-OS-MACH-3.5-4.0	INTRA-AS-OS-MACH-3.5-4.0-H4	INTRA-AS-OS-MACH-3.5-4.0-H7
Art-No.:	ZFX05002027	ZFX05001960	ZFX05001961
ø 4.5 / 5.0 mm	EVO-AS-OS-MACH-4.5-5.0	INTRA-AS-OS-MACH-4.5-5.0-H4	INTRA-AS-OS-MACH-4.5-5.0-H7
Art-No.:	ZFX05002028	ZFX05001962	ZFX05001963

Single crown supply / Bridge supply

	Titanium base with rotation protection for single crowns *regular design, including standard screw*	***Titanium base with rotation protection for single crowns*** *small design, including standard screw*	***Titanium base without rotation protection for bridges*** *regular design, including standard screw*	***Titanium base without rotation protection for bridges*** *small design, including standard screw*
ø 3.0 mm	–	S-TI-Base-AS-OS-TBLO-3.0	–	S-TI-Base-AS-OS-TBUL-3.0
Art-No.:	–	ZFX11000684	–	ZFX11000687
ø 3.5 / 4.0 mm	TI-Base-AS-OS-TBLO-3.5-4.0	S-TI-Base-AS-OS-TBLO-3.5-4.0	TI-Base-AS-OS-TBUL-3.5-4.0	S-TI-Base-AS-OS-TBUL-3.5-4.0
Art-No.:	ZFX11000685	ZFX11001113	ZFX11000688	ZFX11001116
ø 4.5 / 5.0 mm	TI-Base-AS-OS-TBLO-4.5-5.0	S-TI-Base-AS-OS-TBLO-4.5-5.0	TI-Base-AS-OS-TBUL-4.5-5.0	S-TI-Base-AS-OS-TBUL-4.5-5.0
Art-No.:	ZFX11000686	ZFX11001114	ZFX11000689	ZFX11001117

*max. possible screw channel angle

Components Accessories

	Pre-Abutment Blank	Replacement screw standard screw		Model analog
			T Torque	TWIN PACK
ø3.0 mm	–	AS-OS-SCTI-3.0	15 Ncm	MC-Analog-AS-OS-3.0
Art-No.:	–	ZFX09000612		ZFX15002124
ø3.5 / 4.0 mm	–	AS-OS-SCTI-3.5-4.0	20 Ncm	MC-Analog-AS-OS-3.5-4.0
Art-No.:	–	ZFX09000613		ZFX15002125
ø4.5 / 5.0 mm	–	AS-OS-SCTI-4.5-5.0	25 Ncm	MC-Analog-AS-OS-3.5-4.0
Art-No.:	–	ZFX09000614		ZFX15002126

Component accessory for directly screwed prosthetics

	Standard screw		Hexalobular screw
	≤ 20°*	T Torque	
ø3.0 mm	AS-OS-SCTI-3.0	15 Ncm	–
Art-No.:	ZFX09000612		–
ø3.5 / 4.0 mm	AS-OS-SCTI-3.5-4.0	20 Ncm	–
Art-No.:	ZFX09000613		–
ø4.5 / 5.0 mm	AS-OS-SCTI-4.5-5.0	25 Ncm	–
Art-No.:	ZFX09000614		–

Screwdriver

	Standard screw	Hexalobular screw	Scan bodies
ø3.0 mm	FUJI	–	FUJI
ø3.5 / 4.0 mm	FUJI	–	FUJI
ø4.5 / 5.0 mm	FUJI	–	FUJI

Ordering information for screwdrivers from page 8

AS-UN Type fitting Dentsply Implants (Astratech) UniAbutment® system

Scan bodies

	Desktop scan body *including standard screw*	***IOS scan body H4*** *including standard screw*	***IOS scan body H7***
	TWIN PACK	TWIN PACK	
20°	EVO-AS-UN-MACH-20°	INTRA-AS-UN-MACH-20°-H4	–
Art-No.:	ZFX05002163	ZFX05001929	–
45°	EVO-AS-UN-MACH-45°	INTRA-AS-UN-MACH-45°-H4	–
Art-No.:	ZFX05002164	ZFX05001930	–

Single crown supply / Bridge supply

	Titanium base with rotation protection for single crowns	***Titanium base without rotation protection for bridges*** *small design, including standard screw*
20°	–	S-TI-Base-AS-UN-TBUL-20°
Art-No.:	–	ZFX11002091
45°	–	S-TI-Base-AS-UN-TBUL-45°
Art-No.:	–	ZFX11002092

*max. possible screw channel angle

Components Accessories

	Pre-Abutment Blank	Replacement screw standard screw		Model analog
			T Torque	TWIN PACK
20°	–	AS-UN-SCTI-20°-45°	15 Ncm	MC-Analog-AS-UN-20°
Art-No.:	–	ZFX09001009		ZFX15002293
45°	–	AS-UN-SCTI-20°-45°	15 Ncm	MC-Analog-AS-UN-45°
Art-No.:	–	ZFX09001009		ZFX15002294

Component accessory for directly screwed prosthetics

	Standard screw		Hexalobular screw
	≤ 20°*	T Torque	
20°	AS-UN-SCTI-20°-45°	15 Ncm	–
Art-No.:	ZFX09001009		–
45°	AS-UN-SCTI-20°-45°	15 Ncm	–
Art-No.:	ZFX09001009		–

Screwdriver

	Standard screw	Hexalobular screw	Scan bodies
20°	FUJI	–	FUJI
45°	FUJI	–	FUJI

Ordering information for screwdrivers from page 8

GL-AN Type fitting Global D. Angled conical® abutment system

Scan bodies

	Desktop scan body *including standard screw*	IOS scan body H4	IOS scan body H7
	TWIN PACK		
ø 4.7 mm	EVO-GL-AN-MACH-4.7	–	–
Art-No.:	ZFX05002198	–	–

Screwdriver

	Standard screw	Hexalobular screw	Scan bodies
ø 4.7 mm	AORAKI	–	FUJI

Ordering information for screwdrivers from page 8

GL-IK Type fitting Global D. In-Kone® implant system

Scan bodies

	Desktop scan body *including standard screw*	IOS scan body H4	IOS scan body H7
	TWIN PACK		
ø 3.5 / 5.0 mm	EVO-GL-IK-MACH-3.5-5.0	–	–
Art-No.:	ZFX05002209	–	–

Screwdriver

	Standard screw	Hexalobular screw	Scan bodies
ø 3.5 / 5.0 mm	AORAKI	–	FUJI

Ordering information for screwdrivers from page 8

*max. possible screw channel angle

GL-ST Type fitting Global D. Straight conical® abutment system

Scan bodies

	Desktop scan body *including standard screw*	***IOS scan body H4***	***IOS scan body H7***
	TWIN PACK		
ø 4,3 mm	EVO-GL-ST-MACH-4.3	–	–
Art-No.:	ZFX05002196	–	–

Screwdriver

	Standard screw	***Hexalobular screw***	***Scan bodies***
ø 4,3 mm	AORAKI	–	FUJI

Ordering information for screwdrivers from page 8

GL-TK Type fitting Global D. Twinkon® implant system

Scan bodies

	Desktop scan body *including standard screw*	***IOS scan body H4***	***IOS scan body H7***
	TWIN PACK		
ø 4,0 / 4,5 mm	EVO-GL-TK-MACH-4.0-4.5	–	–
Art-No.:	ZFX05002210	–	–

Screwdriver

	Standard screw	***Hexalobular screw***	***Scan bodies***
ø 4,0 / 4,5 mm	AORAKI	–	FUJI

Ordering information for screwdrivers from page 8

ME-ON Type fitting Megagen AnyOne® implant system

Scan bodies

	Desktop scan body *including standard screw*	***IOS scan body H4*** *including standard screw*	***IOS scan body H7***
	TWIN PACK	TWIN PACK	
ø 3.5 / 7.0 mm	EVO-ME-ON-MACH-3.5-7.0	INTRA-ME-ON-MACH-3.5-7.0-H4	–
Art-No.:	ZFX05002202	ZFX05002310	–

Screwdriver

	Standard screw	***Hexalobular screw***	***Scan bodies***
ø 3.5 / 7.0 mm	AORAKI	–	FUJI

Ordering information for screwdrivers from page 8

*max. possible screw channel angle

ME-AN Type fitting Megagen AnyRidge® implant system

Scan bodies

	Desktop scan body *including standard screw*	***IOS scan body H4*** *including standard screw*	***IOS scan body H7*** *including standard screw*
	TWIN PACK	TWIN PACK	TWIN PACK
ø3.5/8.0 mm	EVO-ME-AN-MACH-3.5-8.0	INTRA-ME-AN-MACH-3.5-8.0-H4	INTRA-ME-AN-MACH-3.5-8.0-H7
Art-No.:	ZFX05002269	ZFX05001922	ZFX05001923

Single crown supply

	Titanium base with rotation protection for single crowns *small design, including standard screw*
ø3.5/8.0 mm	S-TI-Base-ME-AN-TBLO-3.5-8.0
Art-No.:	ZFX11002213

Components Accessories

	Replacement screw *standard screw*		***Model analog***
	Torque		TWIN PACK
ø3.5/8.0 mm	ME-AN-SCTI-3.5-8.0	25 – 35 Ncm	MC-Analog-ME-AN-3.5-8.0
Art-No.:	ZFX09002258		ZFX15002326

Component accessory for directly screwed prosthetics

	Tornillo estándar		***Hexalobular screw***	
	0°* Torque			
ø3.5/8.0 mm	ME-AN-SCTI-3.5-8.0	25–35 Ncm	–	
Art-No.:	ZFX09002258		–	

Screwdriver

	Standard screw	***Hexalobular screw***	***Scan bodies***
ø3.5/8.0 mm	AORAKI	–	FUJI

Ordering information for screwdrivers from page 8

ME-EZ Type fitting Megagen EZ Plus® implant system

Scan bodies

	Desktop scan body *including standard screw*	***IOS scan body H4*** *including standard screw*	***IOS scan body H7*** *including standard screw*
	TWIN PACK	TWIN PACK	TWIN PACK
ø 3,3 mm	EVO-ME-EZ-MACH-3.3	INTRA-ME-EZ-MACH-3.3-H4	INTRA-ME-EZ-MACH-3.3-H7
Art-No.:	ZFX05002175	ZFX05001232	ZFX05001233
ø 4,0 / 5,0 mm	EVO-ME-EZ-MACH-4.0-5.0	INTRA-ME-EZ-MACH-4.0-5.0-H4	INTRA-ME-EZ-MACH-4.0-5.0-H7
Art-No.:	ZFX05002176	ZFX05001234	ZFX05001235

Single crown supply / Bridge supply

	Titanium base with rotation protection for single crowns *small design, including standard screw*	***Titanium base without rotation protection for bridges*** *small design, including standard screw*
ø 3,3 mm	S-TI-Base-ME-EZ-TBLO-3.3	S-TI-Base-ME-EZ-TBUL-3.3
Art-No.:	ZFX11002188	ZFX11002191
ø 4,0 / 5,0 mm	S-TI-Base-ME-EZ-TBLO-4.0-5.0	S-TI-Base-ME-EZ-TBUL-4.0-5.0
Art-No.:	ZFX11002189	ZFX11002192

*max. possible screw channel angle

Components Accessories

	Pre-Abutment Blank	Replacement screw standard screw		Model analog
			$\vec{T}$ Torque	TWIN PACK
ø 3,3 mm	–	ME-EZ-SCTI-3.3	25 – 35 Ncm	MC-Analog-ME-EZ-3.3
Art-No.:	–	ZFX09002182		ZFX15002323
ø 4,0 / 5,0 mm	–	ME-EZ-SCTI-4.0-5.0	25 – 35 Ncm	MC-Analog-ME-EZ-4.0-5.0
Art-No.:	–	ZFX09002183		ZFX15002324

Component accessory for directly screwed prosthetics

	Standard screw		Hexalobular screw
	≤20°*	$\vec{T}$ Torque	
ø 3,3 mm	ME-EZ-SCTI-3.3	25 – 35 Ncm	–
Art-No.:	ZFX09002182		–
ø 4,0 / 5,0 mm	ME-EZ-SCTI-4.0-5.0	25 – 35 Ncm	–
Art-No.:	ZFX09002183		–

Screwdriver

	Standard screw	Hexalobular screw	Scan bodies
ø 3.3 mm	AORAKI	–	FUJI
ø 4,0 / 5,0 mm	AORAKI	–	FUJI

Ordering information for screwdrivers from page 8

ME-MUA Type fitting Megagen Multi-Unit Abutment® system

Scan bodies

	Desktop scan body *including standard screw*	***IOS scan body H4*** *including standard screw*	***IOS scan body H7***
	TWIN PACK	TWIN PACK	
ø 4.8 mm	EVO-ME-MUA-4.8	INTRA-ME-MUA-MACH-4.8-H4	–
Art-No.:	ZFX05D-ME-MUA-48	ZFX05I-ME-MUA-48-H4	–

Screwdriver

	Standard screw	***Hexalobular screw***	***Scan bodies***
ø 4.8 mm	AORAKI	–	FUJI

Ordering information for screwdrivers from page 8

*max. possible screw channel angle

ME-RE Type fitting Megagen Rescue Internal® implant system

Scan bodies

	Desktop scan body *including standard screw*	***IOS scan body H4*** *including standard screw*	***IOS scan body H7*** *including standard screw*
	TWIN PACK	TWIN PACK	TWIN PACK
ø 4.5 / 6.0 mm	EVO-ME-RE-MACH-4.5-6.0	INTRA-ME-RE-MACH-4.5-6.0-H4	INTRA-ME-RE-MACH-4.5-6.0-H7
Art-No.:	ZFX05002177	ZFX05001100	ZFX05001101

Single crown supply

Bridge supply

	Titanium base with rotation protection for single crowns *small design, including standard screw*	***Titanium base without rotation protection for bridges*** *small design, including standard screw*
ø 4.5 / 6.0 mm	S-TI-Base-ME-RE-TBLO-4.5-6.0	S-TI-Base-ME-RE-TBUL-4.5-6.0
Art-No.:	ZFX11002190	ZFX11002193

*max. possible screw channel angle

Components Accessories

	Pre-Abutment Blank	Replacement screw standard screw		Model analog
			$\vec{T}$ Torque	TWIN PACK
ø 4.5 / 6.0 mm	–	ME-RE-SCTI-4.5-6.0	25 – 35 Ncm	MC-Analog-ME-RE-4.5-6.0
Art-No.:	–	ZFX09002184		ZFX15002325

Component accessory for directly screwed prosthetics

	Standard screw		Hexalobular screw
	≤20°*	$\vec{T}$ Torque	
ø 4.5 / 6.0 mm	ME-RE-SCTI-4.5-6.0	25 – 35 Ncm	–
Art-No.:	ZFX09002184		–

Screwdriver

	Standard screw	Hexalobular screw	Scan bodies
ø 4.5 / 6.0 mm	AORAKI	–	FUJI

Ordering information for screwdrivers from page 8

MC-TR Type fitting Microdent Trylogic® implant system

Scan bodies

	Desktop scan body *including standard screw*	***IOS scan body H4*** *including standard screw*	***IOS scan body H7*** *including standard screw*
	TWIN PACK	TWIN PACK	TWIN PACK
ø 3.8 mm	EVO-MC-TR-MACH-3.8	INTRA-MC-TR-MACH-3.8-H4	INTRA-MC-TR-MACH-3.8-H7
Art-No.:	ZFX05002257	ZFX05001134	ZFX05001135
ø 4.3 mm	EVO-MC-TR-MACH-4.3	INTRA-MC-TR-MACH-4.3-H4	INTRA-MC-TR-MACH-4.3-H7
Art-No.:	ZFX05002258	ZFX05001136	ZFX05001137
ø 5.1 mm	EVO-MC-TR-MACH-5.1	INTRA-MC-TR-MACH-5.1-H4	INTRA-MC-TR-MACH-5.1-H7
Art-No.:	ZFX05002259	ZFX05001138	ZFX05001139
ø 5.6 mm	EVO-MC-TR-MACH-5.6	INTRA-MC-TR-MACH-5.6-H4	INTRA-MC-TR-MACH-5.6-H7
Art-No.:	ZFX05002260	ZFX05001140	ZFX05001141

Screwdriver

	Standard screw	***Hexalobular screw***	***Scan bodies***
ø 3.8 mm	MERU	–	FUJI
ø 4.3 mm	MERU	–	FUJI
ø 5.1 mm	MERU	–	FUJI
ø 5.6 mm	MERU	–	FUJI

Ordering information for screwdrivers from page 8

*max. possible screw channel angle

MI-IN Type fitting MIS Internal Hex® implant system

Scan bodies

	Desktop scan body *including standard screw*	***IOS scan body H4*** *including standard screw*	***IOS scan body H7*** *including standard screw*
	TWIN PACK	TWIN PACK	TWIN PACK
ø 3.3 mm	EVO-MI-IN-MACH-3.3	–	–
Art-No.:	ZFX05002204	–	–
ø 3.75 / 4.2 mm	EVO-MI-IN-MACH-3.75-4.2	INTRA-MI-IN-MACH-3.75-4.2-H4	INTRA-MI-IN-MACH-3.75-4.2-H7
Art-No.:	ZFX05002291	ZFX05002293	ZFX05002295
ø 5.0 / 6.0 mm	EVO-MI-IN-MACH-5.0-6.0	INTRA-MI-IN-MACH-5.0-6.0-H4	INTRA-MI-IN-MACH-5.0-6.0-H7
Art-No.:	ZFX05002292	ZFX05002294	ZFX05002296

Components Accessories

	Pre-Abutment Blank	***Replacement screw***	***Model analog***
			TWIN PACK
ø 3.3 mm	–	–	–
Art-No.:	–	–	–
ø 3.75 / 4.2 mm	–	–	MC-Analog-MI-IN-3.75-4.2
Art-No.:	–	–	ZFX15002334
ø 5.0 / 6.0 mm	–	–	MC-Analog-MI-IN-5.0-6.0
Art-No.:	–	–	ZFX15002335

Screwdriver

	Standard screw	***Hexalobular screw***	***Scan bodies***
ø 3.3 mm	FUJI	–	FUJI
ø 3.75 / 4.2 mm	FUJI	–	FUJI
ø 5.0 / 6.0 mm	FUJI	–	FUJI

Ordering information for screwdrivers from page 8

MI-MU Type fitting MIS Multi-Unit® abutment system

Scan bodies

	Desktop scan body *including standard screw*	IOS scan body H4	IOS scan body H7
	TWIN PACK		
ø 4.8 mm	EVO-MI-MU-MACH-4.8	–	–
Art-No.:	ZFX05002213	–	–

Screwdriver

	Standard screw	Hexalobular screw	Scan bodies
ø 4.8 mm	FUJI	–	FUJI

Ordering information for screwdrivers from page 8

*max. possible screw channel angle

NO-AC Type fitting Nobel Biocare Active® implant system

Scan bodies

	Desktop scan body *including standard screw*	***IOS scan body H4*** *including standard screw*	***IOS scan body H7*** *including standard screw*
	TWIN PACK	TWIN PACK	TWIN PACK
ø 3.0 mm	EVO-NO-AC-MACH-3.0	–	–
Art-No.:	ZFX05002182	–	–
ø 3.5 mm	EVO-NO-AC-MACH-3.5	INTRA-NO-AC-MACH-3.5-H4	INTRA-NO-AC-MACH-3.5-H7
Art-No.:	ZFX05002040	ZFX05001986	ZFX05001987
ø 4.3 / 5.0 mm	EVO-NO-AC-MACH-4.3-5.0	INTRA-NO-AC-MACH-4.3-5.0-H4	INTRA-NO-AC-MACH-4.3-5.0-H7
Art-No.:	ZFX05002041	ZFX05001988	ZFX05001989
ø 5.5 mm	EVO-NO-AC-MACH-5.5	–	–
Art-No.:	ZFX05002183	–	–

Single crown supply / Bridge supply

	Titanium base with rotation protection for single crowns *regular design, including standard screw*	***Titanium base with rotation protection for single crowns*** *small design, including standard screw*	***Titanium base without rotation protection for bridges*** *regular design, including standard screw*	***Titanium base without rotation protection for bridges*** *small design, including standard screw*
ø 3.0 mm	–	–	–	–
Art-No.:	–	–	–	–
ø 3.5 mm	TI-Base-NO-AC-TBLO-3.5	S-TI-Base-NO-AC-TBLO-3.5	TI-Base-NO-AC-TBUL-3.5	S-TI-Base-NO-AC-TBUL-3.5
Art-No.:	ZFX11000713	ZFX11001130	ZFX11000715	ZFX11001132
ø 4.3 / 5.0 mm	TI-Base-NO-AC-TBLO-4.3-5.0	S-TI-Base-NO-AC-TBLO-4.3-5.0	TI-Base-NO-AC-TBUL-4.3-5.0	S-TI-Base-NO-AC-TBUL-4.3-5.0
Art-No.:	ZFX11000714	ZFX11001131	ZFX11000716	ZFX11001133
ø 5.5 mm	–	–	–	–
Art-No.:	–	–	–	–

*max. possible screw channel angle

Components Accessories

	Pre-Abutment Blank *including standard screw*	Replacement screw *standard screw*		Model analog TWIN PACK
			T Torque	
ø 3.0 mm	–	–		–
Art-No.:	–	–		–
ø 3.5 mm	Pre-Abutment Blank	NO-AC-SCTI-3.5	35 Ncm	MC-Analog-NO-AC-3.5
Art-No.:	ZFX18000210	ZFX09000627		ZFX15002138
ø 4.3 / 5.0 mm	Pre-Abutment Blank	NO-AC-SCTI-4.3-5.0	35 Ncm	MC-Analog-NO-AC-4.3-5.0
Art-No.:	ZFX18000220	ZFX09000628		ZFX15002139
ø 5.5 mm	–	NO-AC-SCTI-4.3-5.0	35 Ncm	–
Art-No.:	–	ZFX09000628		–

Component accessory for directly screwed prosthetics

	Standard screw ≤ 25°*		Hexalobular screw
		T Torque	
ø 3.0 mm	–		–
Art-No.:	–		–
ø 3.5 mm	NO-AC-SCTI-3.5	35 Ncm	–
Art-No.:	ZFX09000627		–
ø 4.3 / 5.0 mm	NO-AC-SCTI-4.3-5.0	35 Ncm	–
Art-No.:	ZFX09000628		–
ø 5.5 mm	NO-AC-SCTI-4.3-5.0	35 Ncm	–
Art-No.:	ZFX09000628		–

Screwdriver

	Standard screw	Hexalobular screw	Scan bodies
ø 3.0 mm	AORAKI	–	FUJI
ø 3.5 mm	AORAKI	–	FUJI
ø 4.3 / 5.0 mm	AORAKI	–	FUJI
ø 5.5 mm	AORAKI	–	FUJI

Ordering information for screwdrivers from page 8

NO-BR Type fitting Nobel Biocare Brånemark® implant system

Scan bodies

	Desktop scan body *including standard screw*	***IOS scan body H4*** *including standard screw*	***IOS scan body H7*** *including standard screw*
	TWIN PACK	TWIN PACK	TWIN PACK
ø 3.5 mm	EVO-NO-BR-MACH-3.5	INTRA-NO-BR-MACH-3.5-H4	INTRA-NO-BR-MACH-3.5-H7
Art-No.:	ZFX05002042	ZFX05001990	ZFX05001991
ø 4.1 mm	EVO-NO-BR-MACH-4.1	INTRA-NO-BR-MACH-4.1-H4	INTRA-NO-BR-MACH-4.1-H7
Art-No.:	ZFX05002043	ZFX05001992	ZFX05001993
ø 5.1 mm	EVO-NO-BR-MACH-5.1	INTRA-NO-BR-MACH-5.1-H4	INTRA-NO-BR-MACH-5.1-H7
Art-No.:	ZFX05002044	ZFX05001994	ZFX05001995

Single crown supply / Bridge supply

	Titanium base with rotation protection for single crowns		***Titanium base without rotation protection for bridges***	
	regular design, including standard screw	*small design, including standard screw*	*regular design, including standard screw*	*small design, including standard screw*
ø 3.5 mm	TI-Base-NO-BR-TBLO-3.5	S-TI-Base-NO-BR-TBLO-3.5	–	S-TI-Base-NO-BR-TBUL-3.5
Art-No.:	ZFX11000717	ZFX11001134	–	ZFX11000720
ø 4.1 mm	TI-Base-NO-BR-TBLO-4.1	S-TI-Base-NO-BR-TBLO-4.1	–	S-TI-Base-NO-BR-TBUL-4.1
Art-No.:	ZFX11000718	ZFX11001135	–	ZFX11000721
ø 5.1 mm	TI-Base-NO-BR-TBLO-5.1	S-TI-Base-NO-BR-TBLO-5.1	–	S-TI-Base-NO-BR-TBUL-5.1
Art-No.:	ZFX11000719	ZFX11001136	–	ZFX11000722

*max. possible screw channel angle

Components Accessories

	Pre-Abutment Blank *including standard screw*	Replacement screw *standard screw*		Model analog TWIN PACK
			T Torque	
ø 3.5 mm	Pre-Abutment Blank	NO-BR-SCTI-3.5	35Ncm	MC-Analog-NO-BR-3.5
Art-No.:	ZFX18000230	ZFX09000631		ZFX15002140
ø 4.1 mm	Pre-Abutment Blank	NO-BR-SCTI-4.1	35 Ncm	MC-Analog-NO-BR-4.1
Art-No.:	ZFX18000240	ZFX09000632		ZFX15002141
ø 5.1 mm	Pre-Abutment Blank	NO-BR-SCTI-5.1	35 Ncm	MC-Analog-NO-BR-5.1
Art-No.:	ZFX18000250	ZFX09000633		ZFX15002142

Component accessory for directly screwed prosthetics

	Standard screw ≤ 20°*		Hexalobular screw
		T Torque	
ø 3.5 mm	NO-BR-SCTI-3.5	35 Ncm	–
Art-No.:	ZFX09000631		–
ø 4.1 mm	NO-BR-SCTI-4.1	35 Ncm	–
Art-No.:	ZFX09000632		–
ø 5.1 mm	NO-BR-SCTI-5.1	35 Ncm	–
Art-No.:	ZFX09000633		–

Screwdriver

	Standard screw	Hexalobular screw	Scan bodies
ø 3.5 mm	AORAKI	–	FUJI
ø 4.1 mm	AORAKI	–	FUJI
ø 5.1 mm	AORAKI	–	FUJI

Ordering information for screwdrivers from page 8

NO-MU Type fitting Nobel Biocare Multi-unit® abutment system

Scan bodies

	Desktop scan body *including standard screw*	***IOS scan body H4*** *including standard screw*	***IOS scan body H7*** *including standard screw*
	TWIN PACK	TWIN PACK	TWIN PACK
ø 4.8 mm	EVO-NO-MU-MACH-4.8	INTRA-NO-MU-MACH-4.8-H4	INTRA-NO-MU-MACH-4.8-H7
Art-No.:	ZFX05002045	ZFX05001228	ZFX05001229
ø 6.0 mm	EVO-NO-MU-MACH-6.0	INTRA-NO-MU-MACH-6.0-H4	INTRA-NO-MU-MACH-6.0-H7
Art-No.:	ZFX05002046	ZFX05001230	ZFX05001231

Single crown supply / Bridge supply

	Titanium base with rotation protection for single crowns	***Titanium base without rotation protection for bridges*** *small design, including standard screw*
ø 4.8 mm	–	TI-Base-NO-MU-TBUL-4.8
Art-No.:	–	ZFX11000723
ø 6.0 mm	–	TI-Base-NO-MU-TBUL-6.0
Art-No.:	–	ZFX11000724

*max. possible screw channel angle

Components Accessories

	Pre-Abutment Blank	Replacement screw standard screw		Model analog
			T Torque	TWIN PACK
ø 4.8 mm	–	NO-MU-SCTI-4.8	15 Ncm	MC-Analog-NO-MU-4.8
Art-No.:	–	ZFX09000637		ZFX15002300
ø 6.0 mm	–	NO-MU-SCTI-6.0	15 Ncm	MC-Analog-NO-MU-6.0
Art-No.:	–	ZFX09000638		ZFX15002301

Component accessory for directly screwed prosthetics

	Standard screw		Hexalobular screw
	≤ 20°*	T Torque	
ø 4.8 mm	NO-MU-SCTI-4.8	15 Ncm	–
Art-No.:	ZFX09000637		–
ø 6.0 mm	NO-MU-SCTI-6.0	15 Ncm	–
Art-No.:	ZFX09000638		–

Screwdriver

	Standard screw	Hexalobular screw	Scan bodies
ø 4.8 mm	AORAKI	–	FUJI
ø 6.0 mm	AORAKI	–	FUJI

Ordering information for screwdrivers from page 8

NO-RE Type fitting Nobel Biocare Replace® implant system

Scan bodies

	Desktop scan body *including standard screw*	***IOS scan body H4*** *including standard screw*	***IOS scan body H7*** *including standard screw*
	TWIN PACK	TWIN PACK	TWIN PACK
ø 3.5 mm	EVO-NO-RE-MACH-3.5	INTRA-NO-RE-MACH-3.5-H4	INTRA-NO-RE-MACH-3.5-H7
Art-No.:	ZFX05002047	ZFX05001996	ZFX05001997
ø 4.3 mm	EVO-NO-RE-MACH-4.3	INTRA-NO-RE-MACH-4.3-H4	INTRA-NO-RE-MACH-4.3-H7
Art-No.:	ZFX05002048	ZFX05001998	ZFX05001999
ø 5.0 mm	EVO-NO-RE-MACH-5.0	INTRA-NO-RE-MACH-5.0-H4	INTRA-NO-RE-MACH-5.0-H7
Art-No.:	ZFX05002049	ZFX05002000	ZFX05002001
ø 6.0 mm	EVO-NO-RE-MACH-6.0	INTRA-NO-RE-MACH-6.0-H4	INTRA-NO-RE-MACH-6.0-H7
Art-No.:	ZFX05002050	ZFX05002002	ZFX05002003

Single crown supply / Bridge supply

	Titanium base with rotation protection for single crowns		***Titanium base without rotation protection for bridges***	
	regular design, including standard screw	*small design, including standard screw*	*regular design, including standard screw*	*small design, including standard screw*
ø 3.5 mm	TI-Base-NO-RE-TBLO-3.5	S-TI-Base-NO-RE-TBLO-3.5	TI-Base-NO-RE-TBUL-3.5	S-TI-Base-NO-RE-TBUL-3.5
Art-No.:	ZFX11000725	ZFX11001140	ZFX11000729	ZFX11001144
ø 4.3 mm	TI-Base-NO-RE-TBLO-4.3	S-TI-Base-NO-RE-TBLO-4.3	TI-Base-NO-RE-TBUL-4.3	S-TI-Base-NO-RE-TBUL-4.3
Art-No.:	ZFX11000726	ZFX11001141	ZFX11000730	ZFX11001145
ø 5.0 mm	TI-Base-NO-RE-TBLO-5.0	S-TI-Base-NO-RE-TBLO-5.0	TI-Base-NO-RE-TBUL-5.0	S-TI-Base-NO-RE-TBUL-5.0
Art-No.:	ZFX11000727	ZFX11001142	ZFX11000731	ZFX11001146
ø 6.0 mm	TI-Base-NO-RE-TBLO-6.0	S-TI-Base-NO-RE-TBLO-6.0	TI-Base-NO-RE-TBUL-6.0	S-TI-Base-NO-RE-TBUL-6.0
Art-No.:	ZFX11000728	ZFX11001143	ZFX11000732	ZFX11001147

*max. possible screw channel angle

Components Accessories

	Pre-Abutment Blank *including standard screw*	Replacement screw *standard screw*		Model analog TWIN PACK
			T Torque	
ø 3.5 mm	Pre-Abutment Blank	NO-RE-SCTI-3.5	35 Ncm	MC-Analog-NO-RE-3.5
Art-No.:	ZFX18000170	ZFX09000641		ZFX15002143
ø 4.3 mm	Pre-Abutment Blank	NO-RE-SCTI-4.3-6.0	35 Ncm	MC-Analog-NO-RE-4.3
Art-No.:	ZFX18000180	ZFX09000642		ZFX15002144
ø 5.0 mm	Pre-Abutment Blank	NO-RE-SCTI-4.3-6.0	35 Ncm	MC-Analog-NO-RE-5.0
Art-No.:	ZFX18000190	ZFX09000642		ZFX15002145
ø 6.0 mm	Pre-Abutment Blank	NO-RE-SCTI-4.3-6.0	35 Ncm	MC-Analog-NO-RE-6.0
Art-No.:	ZFX18000200	ZFX09000642		ZFX15002146

Component accessory for directly screwed prosthetics

	Standard screw ≤ 20°*		Hexalobular screw
		T Torque	
ø 3.5 mm	NO-RE-SCTI-3.5	35 Ncm	–
Art-No.:	ZFX09000641		–
ø 4.3 mm	NO-RE-SCTI-4.3-6.0	35 Ncm	–
Art-No.:	ZFX09000642		–
ø 5.0 mm	NO-RE-SCTI-4.3-6.0	35 Ncm	–
Art-No.:	ZFX09000642		–
ø 6.0 mm	NO-RE-SCTI-4.3-6.0	35 Ncm	–
Art-No.:	ZFX09000642		–

Screwdriver

	Standard screw	Hexalobular screw	Scan bodies
ø 3.5 mm	AORAKI	–	FUJI
ø 4.3 mm	AORAKI	–	FUJI
ø 5.0 mm	AORAKI	–	FUJI
ø 6.0 mm	AORAKI	–	FUJI

Ordering information for screwdrivers from page 8

OS-GS Type fitting Osstem GS & TS System® implant system

Scan bodies

	Desktop scan body *including standard screw*	***IOS scan body H4*** *including standard screw*	***IOS scan body H7*** *including standard screw*
	TWIN PACK	TWIN PACK	TWIN PACK
ø 3.5 mm	EVO-OS-GS-MACH-3.5	INTRA-OS-GS-MACH-3.5-H	INTRA-OS-GS-MACH-3.5-H7
Art-No.:	ZFX05002173	ZFX05001096	ZFX05001097
ø 4.0 / 7.0 mm	EVO-OS-GS-MACH-4.0-7.0	INTRA-OS-GS-MACH-4.0-7.0-H4	INTRA-OS-GS-MACH-4.0-7.0-H7
Art-No.:	ZFX05002174	ZFX05001098	ZFX05001099

Single crown supply

Bridge supply

	Titanium base with rotation protection for single crowns	***Titanium base without rotation protection for bridges*** *small design, including standard screw*
ø 3.5 mm	S-TI-Base-OS-GS-TBLO-3.5	S-TI-Base-OS-GS-TBUL-3.5
Art-No.:	ZFX11002112	ZFX11002114
ø 4.0 / 7.0 mm	S-TI-Base-OS-GS-TBLO-4.0-7.0	S-TI-Base-OS-GS-TBUL-4.0-7.0
Art-No.:	ZFX11002113	ZFX11002115

*max. possible screw channel angle

Components Accessories

	Pre-Abutment Blank	Replacement screw standard screw		Model analog
			T Torque	TWIN PACK
ø 3.5 mm	–	OS-GS-SCTI-3.5	20 Ncm	MC-Analog-OS-GS-3.5
Art-No.:	–	ZFX09002110		ZFX15002308
ø 4.0 / 7.0 mm	–	OS-GS-SCTI-4.0-7.0	30 Ncm	MC-Analog-OS-GS-4.0-7.0
Art-No.:	–	ZFX09002111		ZFX15002309

Component accessory for directly screwed prosthetics

	Standard screw		Hexalobular screw	
	≤ 20°*	T Torque		
ø 3.5 mm	OS-GS-SCTI-3.5	20 Ncm	–	
Art-No.:	ZFX09002110		–	
ø 4.0 / 7.0 mm	OS-GS-SCTI-4.0-7.0	30 Ncm	–	
Art-No.:	ZFX09002111		–	

Screwdriver

	Standard screw	Hexalobular screw	Scan bodies
ø 3.5 mm	AORAKI	–	FUJI
ø 4.0 / 7.0 mm	AORAKI	–	FUJI

Ordering information for screwdrivers from page 8

PI-AMP Type fitting P-I Amplified® implant system

Scan bodies

	Desktop scan body *including standard screw*	***IOS scan body H4*** *including standard screw*	***IOS scan body H7*** *including standard screw*
	TWIN PACK	TWIN PACK	TWIN PACK
ø 3.5 mm	EVO-PI-AMP-MACH-3.5	INTRA-PI-AMP-MACH-3.5-H4	INTRA-PI-AMP-MACH-3.5-H7
Art-No.:	ZFX05002273	ZFX05002297	ZFX05002299
ø 4.3 / 5.1 mm	EVO-PI-AMP-MACH-4.3-5.1	INTRA-PI-AMP-MACH-4.3-5.1-H4	INTRA-PI-AMP-MACH-4.3-5.1-H7
Art-No.:	ZFX05002274	ZFX05002298	ZFX05002300

Components Accessories

	Pre-Abutment Blank	***Replacement screw***	***Model analog***
			TWIN PACK
ø 3.5 mm	–	–	MC-Analog-PI-AMP-3.5
Art-No.:	–	–	ZFX15002336
ø 4.3 / 5.1 mm	–	–	MC-Analog-PI-AMP-4.3-5.1
Art-No.:	–	–	ZFX15002337

Screwdriver

	Standard screw	***Hexalobular screw***	***Scan bodies***
ø 3.5 mm	AORAKI	–	FUJI
ø 4.3 / 5.1 mm	AORAKI	–	FUJI

Ordering information for screwdrivers from page 8

*max. possible screw channel angle

PI-CO Type fitting P-I Conical Abutment® implant system

Scan bodies

	Desktop scan body *including standard screw*	***IOS scan body H4*** *including standard screw*	***IOS scan body H7***
	TWIN PACK	TWIN PACK	
ø 4.8 mm	EVO-PI-CO-MACH-4.8	INTRA-PI-CO-MACH-4.8-H4	–
Art-No.:	ZFX05002275	ZFX05002301	–

Screwdriver

	Standard screw	***Hexalobular screw***	***Scan bodies***
ø 4.8 mm	AORAKI	–	FUJI

Ordering information for screwdrivers from page 8

PI-HE Type fitting P-I External Hexagon® implant system

Scan bodies

	Desktop scan body *including standard screw*	***IOS scan body H4*** *including standard screw*	***IOS scan body H7*** *including standard screw*
	TWIN PACK	TWIN PACK	TWIN PACK
ø 3.5 mm	EVO-PI-HE-MACH-3.5	INTRA-PI-HE-MACH-3.5-H4	INTRA-PI-HE-MACH-3.5-H7
Art-No.:	ZFX05002276	ZFX05002302	ZFX05002305
ø 4.1 mm	EVO-PI-HE-MACH-4.1	INTRA-PI-HE-MACH-4.1-H4	INTRA-PI-HE-MACH-4.1-H7
Art-No.:	ZFX05002277	ZFX05002303	ZFX05002306
ø 5.1 mm	EVO-PI-HE-MACH-5.1	INTRA-PI-HE-MACH-5.1-H4	INTRA-PI-HE-MACH-5.1-H7
Art-No.:	ZFX05002278	ZFX05002304	ZFX05002307

Component accessory for directly screwed prosthetics

	Pre-Abutment Blank	***Standard screw***	***Model analog***
			TWIN PACK
ø 3.5 mm	–	–	MC-Analog-PI-HE-3.5
Art-No.:	–	–	ZFX15002339
ø 4.1 mm	–	–	MC-Analog-PI-HE-4.1
Art-No.:	–	–	ZFX15002340
ø 5.1 mm	–	–	MC-Analog-PI-HE-5.1
Art-No.:	–	–	ZFX15002341

Screwdriver

	Standard screw	***Hexalobular screw***	***Scan bodies***
ø 3.5 mm	AORAKI	–	FUJI
ø 4.1 mm	AORAKI	–	FUJI
ø 5.1 mm	AORAKI	–	FUJI

Ordering information for screwdrivers from page 8

*max. possible screw channel angle

PI-MT Type fitting P-I Morse Taper® implant system

Scan bodies

	Desktop scan body *including standard screw*	***IOS scan body H4*** *including standard screw*	***IOS scan body H7*** *including standard screw*
	TWIN PACK	TWIN PACK	TWIN PACK
ø3.5 / 5.1mm	EVO-PI-MT-MACH-3.5-5.1	INTRA-PI-MT-MACH-3.5-5.1-H4	INTRA-PI-MT-MACH-3.5-5.1-H7
Art-Nr,:	ZFX05002279	ZFX05002308	ZFX05002309

Components Accessories

	Pre-Abutment Blank	***Replacement screw***	***Model analog***
			TWIN PACK
ø3.5 / 5.1mm	–	–	MC-Analog-PI-MT-3.5-5.1
Art-No.:	–	–	ZFX15002342

Screwdriver

	Standard screw	***Hexalobular screw***	***Scan bodies***
ø3.5 / 5.1mm	AORAKI	–	FUJI

Ordering information for screwdrivers from page 8

SE-ML Type fitting Serf Multi DIE® implant system

Scan bodies

	Desktop scan body *including standard screw*	***IOS scan body H4***	***IOS scan body H7***
	TWIN PACK		
ø 3.3 mm	EVO-SE-ML-MACH-3.3	–	–
Art-No.:	ZFX05002107	–	–
ø 4.0 mm	EVO-SE-ML-MACH-4.0	–	–
Art-No.:	ZFX05002108	–	–
ø 5.0 mm	EVO-SE-ML-MACH-5.0	–	–
Art-No.:	ZFX05002109	–	–

Screwdriver

	Standard screw	***Hexalobular screw***	***Scan bodies***
ø 3.3 mm	AORAKI	–	FUJI
ø 4.0 mm	AORAKI	–	FUJI
ø 5.0 mm	AORAKI	–	FUJI

Ordering information for screwdrivers from page 8

*max. possible screw channel angle

SE-MU Type fitting Serf MUA TR WD® abutment system

Scan bodies

	Desktop scan body *including standard screw*	***IOS scan body H4***	***IOS scan body H7***
	TWIN PACK		
ø 5.2 mm	EVO-SE-MU-MACH-5.2	–	–
Art-No.:	ZFX05002105	–	–
ø 6.0 mm	EVO-SE-MU-MACH-6.0	–	–
Art-No.:	ZFX05002106	–	–

Screwdriver

	Standard screw	***Hexalobular screw***	***Scan bodies***
ø 5.2 mm	AORAKI	–	FUJI
ø 6.0 mm	AORAKI	–	FUJI

Ordering information for screwdrivers from page 8

ST-BO Type fitting Straumann Institut Bone Level® implant system

Scan bodies

	Desktop scan body *including standard screw*	***IOS scan body H4*** *including standard screw*	***IOS scan body H7*** *including standard screw*
	TWIN PACK	TWIN PACK	TWIN PACK
ø 3.3 mm	EVO-ST-BO-MACH-3.3	INTRA-ST-BO-MACH-3.3-H4	INTRA-ST-BO-MACH-3.3-H7
Art-No.:	ZFX05002051	ZFX05002004	ZFX05002005
ø 4.1 / 4.8 mm	EVO-ST-BO-MACH-4.1-4.8	INTRA-ST-BO-MACH-4.1-4.8-H4	INTRA-ST-BO-MACH-4.1-4.8-H7
Art-No.:	ZFX05002052	ZFX05002006	ZFX05002007

Single crown supply / Bridge supply

	Titanium base with rotation protection for single crowns		***Titanium base without rotation protection for bridges***	
	regular design, including standard screw	*small design, including standard screw*	*regular design, including standard screw*	*small design, including standard screw*
ø 3.3 mm	TI-Base-ST-BO-TBLO-3.3	S-TI-Base-ST-BO-TBLO-3.3	TI-Base-ST-BO-TBUL-3.3	S-TI-Base-ST-BO-TBUL-3.3
Art-No.:	ZFX11000733	ZFX11001148	ZFX11000735	ZFX11001150
ø 4.1 / 4.8 mm	TI-Base-ST-BO-TBLO-4.1-4.8	S-TI-Base-ST-BO-TBLO-4.1-4.8	TI-Base-ST-BO-TBUL-4.1-4.8	S-TI-Base-ST-BO-TBUL-4.1-4.8
Art-No.:	ZFX11000734	ZFX11001149	ZFX11000736	ZFX11001151

*max. possible screw channel angle

Components Accessories

	Pre-Abutment Blank *including standard screw*	***Replacement screw*** *standard screw*		***Model analog***
			T Torque	TWIN PACK
ø 3.3 mm	Pre-Abutment Blank	ST-BO-SCTI-3.3	35 Ncm	MC-Analog-ST-BO-3.3
Art-No.:	ZFX18000100	ZFX09000645		ZFX15002147
ø 4.1 / 4.8 mm	Pre-Abutment Blank	ST-BO-SCTI-4.1-4.8	35 Ncm	MC-Analog-ST-BO-4.1-4.8
Art-No.:	ZFX18000110	ZFX09000646		ZFX15002148

Component accessory for directly screwed prosthetics

	Standard screw		***Hexalobular screw***
	≤ 25°*	T Torque	
ø 3.3 mm	ST-BO-SCTI-3.3	35 Ncm	–
Art-No.:	ZFX09000645		–
ø 4.1 / 4.8 mm	ST-BO-SCTI-4.1-4.8	35 Ncm	–
Art-No.:	ZFX09000646		–

Screwdriver

	Standard screw	***Hexalobular screw***	***Scan bodies***
ø 3.3 mm	EIGER	–	FUJI
ø 4.1 / 4.8 mm	EIGER	–	FUJI

Ordering information for screwdrivers from page 8

ST-MU Type fitting Straumann Institut Multi-Base® abutment system

Scan bodies / Bridge supply

	Desktop scan body *including standard screw*	IOS scan body H4 *including standard screw*	Titanium base without rotation protection for bridges *small design, including standard screw*
	TWIN PACK	TWIN PACK	
ø 3.5 mm	EVO-ST-MU-MACH-3.5	INTRA-ST-MU-MACH-3.5-H4	S-TI-Base-ST-MU-TBUL-3.5
Art-No.:	ZFX05002168	ZFX05001934	ZFX11002096
ø 4.5 mm	EVO-ST-MU-MACH-4.5	INTRA-ST-MU-MACH-4.5-H4	S-TI-Base-ST-MU-TBUL-4.5
Art-No.:	ZFX05002169	ZFX05001935	ZFX11002097
ø 6.5 mm	EVO-ST-MU-MACH-6.5	INTRA-ST-MU-MACH-6.5-H4	S-TI-Base-ST-MU-TBUL-6.5
Art-No.:	ZFX05002170	ZFX05001936	ZFX11002098

Component accessory for directly screwed prosthetics

	Pre-Abutment Blank	Standard screw		Model analog
		≤ 25°*		TWIN PACK
			$\vec{T}$ Torque	
ø 3.5 mm	–	ST-MU-SCTI-3.5-6.5	15 Ncm	MC-Analog-ST-MU-3.5
Art-No.:	–	ZFX09001011		ZFX15002302
ø 4.5 mm	–	ST-MU-SCTI-3.5-6.5	15 Ncm	MC-Analog-ST-MU-4.5
Art-No.:	–	ZFX09001011		ZFX15002303
ø 6.5 mm	–	ST-MU-SCTI-3.5-6.5	15 Ncm	MC-Analog-ST-MU-6.5
Art-No.:	–	ZFX09001011		ZFX15002304

Screwdriver

	Standard screw	Hexalobular screw	Scan bodies
ø 3.5 mm	EIGER	–	FUJI
ø 4.5 mm	EIGER	–	FUJI
ø 6.5 mm	EIGER	–	FUJI

Ordering information for screwdrivers from page 8

*max. possible screw channel angle

ST-NNC Type fitting Straumann Institut Narrow Neck® implant system

Scan bodies

	Desktop scan body *including standard screw*	IOS scan body H4	IOS scan body H7
	TWIN PACK		
ø 3.5 mm	EVO-ST-NNC-MACH-3.5	–	–
Art-No.:	ZFX05002184	–	–

Component accessory for directly screwed prosthetics

	Standard screw		Hexalobular screw	
	≤ 25°*	T Torque		
ø 3.5 mm	ST-NNC-3.5	35 Ncm	–	
Art-No.:	ZFX09-ST-NNC		–	

Screwdriver

	Standard screw	Hexalobular screw	Scan bodies
ø 3.5 mm	EIGER	–	FUJI

Ordering information for screwdrivers from page 8

ST-OC Type fitting Straumann Institut Octa® (External Octagon) implant system

Scan bodies

	Desktop scan body *including standard screw*	***IOS scan body H4***	***IOS scan body H7***
	TWIN PACK		
ø 4.8 mm	EVO-ST-OC-MACH-4.8	–	–
Art-No.:	ZFX05002280	–	–
ø 6.5 mm	EVO-ST-OC-MACH-6.5	–	–
Art-No.:	ZFX05002281	–	–

Component accessory for directly screwed prosthetics

	Standard screw		***Hexalobular screw***
	≤ 25°*	T Torque	
ø 4.8 mm	ST-OC-SCTI-4.8-6.5	15 Ncm	–
Art-No.:	ZFX09002326		–
ø 6.5 mm	ST-OC-SCTI-4.8-6.5	15 Ncm	–
Art-No.:	ZFX09002326		–

Screwdriver

	Standard screw	***Hexalobular screw***	***Scan bodies***
ø 4.8 mm	EIGER	–	FUJI
ø 6.5 mm	EIGER	–	FUJI

Ordering information for screwdrivers from page 8

*max. possible screw channel angle

ST-SC Type fitting Straumann Institut Screw-retained® abutment system

Scan bodies

	Desktop scan body *including standard screw*	***IOS scan body H4*** *including standard screw*	***IOS scan body H7***
	TWIN PACK	TWIN PACK	
ø 3.3 mm	EVO-ST-SC-MACH-35	INTRA-ST-SC-MACH-35-H4	–
Art-No.:	ZFX05D-ST-SC-35	ZFX05I-ST-SC-35-H4	–
ø 4.1 / 4.8 mm	EVO-ST-SC-MACH-46	INTRA-ST-SC-MACH-46-H4	–
Art-No.:	ZFX05D-ST-SC-46	ZFX05I-ST-SC-46-H4	–

Component accessory for directly screwed prosthetics

	Standard screw		***Hexalobular screw***
	≤ 25°*	T Torque	
ø 3.3 mm	TI-Screw-ST-SC	15 Ncm	–
Art-No.:	ZFX09-ST-SC		–
ø 4.1 / 4.8 mm	TI-Screw-ST-SC	15 Ncm	–
Art-No.:	ZFX09-ST-SC		–

Screwdriver

	Standard screw	***Hexalobular screw***	***Scan bodies***
ø 3.5 mm	EIGER	–	FUJI
ø 3.5 mm	EIGER	–	FUJI

Ordering information for screwdrivers from page 8

ST-SY Type fitting Straumann Institut SynOcta® implant system

Scan bodies

	Desktop scan body *including standard screw*	***IOS scan body H4*** *including standard screw*	***IOS scan body H7*** *including standard screw*
	TWIN PACK	TWIN PACK	TWIN PACK
ø 3.5 mm	EVO-ST-SY-MACH-3.5	INTRA-ST-SY-MACH-3.5-H4	INTRA-ST-SY-MACH-3.5-H7
Art-No.:	ZFX05002053	ZFX05002008	ZFX05002009
ø 4.8 mm	EVO-ST-SY-MACH-4.8	INTRA-ST-SY-MACH-4.8-H4	INTRA-ST-SY-MACH-4.8-H7
Art-No.:	ZFX05002054	ZFX05002010	ZFX05002011
ø 6.5 mm	EVO-ST-SY-MACH-6.5	INTRA-ST-SY-MACH-6.5-H4	INTRA-ST-SY-MACH-6.5-H7
Art-No.:	ZFX05002055	ZFX05002012	ZFX05002013

Single crown supply / Bridge supply

	Titanium base with rotation protection for single crowns		***Titanium base without rotation protection for bridges***	
	regular design, including standard screw	*small design, including standard screw*	*regular design, including standard screw*	*small design, including standard screw*
ø 3.5 mm	TI-Base-ST-SY-TBLO-3.5	S-TI-Base-ST-SY-TBLO-3.5	–	S-TI-Base-ST-SY-TBUL-3.5
Art-No.:	ZFX11000737	ZFX11001152	–	ZFX11000740
ø 4.8 mm	TI-Base-ST-SY-TBLO-4.8	–	TI-Base-ST-SY-TBUL-4.8	–
Art-No.:	ZFX11000738	–	ZFX11000741	–
ø 6.5 mm	TI-Base-ST-SY-TBLO-6.5	–	TI-Base-ST-SY-TBUL-6.5	–
Art-No.:	ZFX11000739	–	ZFX11000742	–

*max. possible screw channel angle

Components Accessories

	Pre-Abutment Blank *including standard screw*	***Replacement screw*** *standard screw*		***Model analog***
			T Torque	TWIN PACK
ø 3.5 mm	–	ST-SY-SCTI-3.5	35 Ncm	MC-Analog-ST-SY-3.5
Art-No.:	–	ZFX09000648		ZFX15002149
ø 4.8 mm	Pre-Abutment Blank	ST-SY-SCTI-4.8-6.5	35 Ncm	MC-Analog-ST-SY-4.8
Art-No.:	ZFX18000120	ZFX09000649		ZFX15002150
ø 6.5 mm	Pre-Abutment Blank	ST-SY-SCTI-4.8-6.5	35 Ncm	MC-Analog-ST-SY-6.5
Art-No.:	ZFX18000130	ZFX09000649		ZFX15002151

Component accessory for directly screwed prosthetics

	Standard screw		***Hexalobular screw***
	≤ 25°*	*T* Torque	
ø 3.5 mm	ST-SY-SCTI-3.5	35 Ncm	–
Art-No.:	ZFX09000648		–
ø 4.8 mm	ST-SY-SCTI-4.8-6.5	35 Ncm	–
Art-No.:	ZFX09000649		–
ø 6.5 mm	ST-SY-SCTI-4.8-6.5	35 Ncm	–
Art-No.:	ZFX09000649		–

Screwdriver

	Standard screw	***Hexalobular screw***	***Scan bodies***
ø 3.5 mm	EIGER	–	FUJI
ø 4.8 mm	EIGER	–	FUJI
ø 6.5 mm	EIGER	–	FUJI

Ordering information for screwdrivers from page 8

ST-SY-CE Type fitting Straumann Institut SynOcta® Cementable implant system

Scan bodies

	Desktop scan body *including standard screw*	***IOS scan body H4*** *including standard screw*	***IOS scan body H7*** *including standard screw*
	TWIN PACK	TWIN PACK	TWIN PACK
ø 4.8 mm	EVO-ST-SY-MACH-4.8	INTRA-ST-SY-MACH-4.8-H4	INTRA-ST-SY-MACH-4.8-H7
Art-No.:	ZFX05002054	ZFX05002010	ZFX05002011
ø 6.5 mm	EVO-ST-SY-MACH-6.5	INTRA-ST-SY-MACH-6.5-H4	INTRA-ST-SY-MACH-6.5-H7
Art-No.:	ZFX05002055	ZFX05002012	ZFX05002013

Component accessory for directly screwed prosthetics

	Pre-Abutment Blank	***Standard screw*** ≤ 25°*		***Model analog***
			Torque	
ø 4.8 mm	–	ST-SY-CE-SCTI-4.8-6.5	15 Ncm	MC-Analog-ST-SY-4.8
Art-No.:	–	ZFX09002325		ZFX15002150
ø 6.5 mm	–	ST-SY-CE-SCTI-4.8-6.5	15 Ncm	MC-Analog-ST-SY-6.5
Art-No.:	–	ZFX09002325		ZFX15002151

Screwdriver

	Standard screw	***Hexalobular screw***	***Scan bodies***
ø 4.8 mm	EIGER	–	FUJI
ø 6.5 mm	EIGER	–	FUJI

Ordering information for screwdrivers from page 8

*max. possible screw channel angle

SW-GL Type fitting Sweden & Martina Global® implant system

Scan bodies

	Desktop scan body *including standard screw*	***IOS scan body H4*** *including standard screw*	***IOS scan body H7*** *including standard screw*
	TWIN PACK	TWIN PACK	TWIN PACK
ø 3.8 mm	EVO-SW-GL-MACH-3.8	INTRA-SW-GL-MACH-3.8-H4	INTRA-SW-GL-MACH-3.8-H7
Art-No.:	ZFX05002261	ZFX05001124	ZFX05001125
ø 4.3 mm	EVO-SW-GL-MACH-4.3	INTRA-SW-GL-MACH-4.3-H4	INTRA-SW-GL-MACH-4.3-H7
Art-No.:	ZFX05002262	ZFX05001126	ZFX05001127
ø 4.8 mm	EVO-SW-GL-MACH-4.8	INTRA-SW-GL-MACH-4.8-H4	INTRA-SW-GL-MACH-4.8-H7
Art-No.:	ZFX05002263	ZFX05001128	ZFX05001129
ø 5.5 mm	EVO-SW-GL-MACH-5.5	INTRA-SW-GL-MACH-5.5-H4	INTRA-SW-GL-MACH-5.5-H7
Art-No.:	ZFX05002264	ZFX05001130	ZFX05001131

Components Accessories

	Pre-Abutment Blank	***Replacement screw***	***Model analog***
			TWIN PACK
ø 3.8 mm	–	–	MC-Analog-SW-GL-3.8
Art-No.:	–	–	ZFX15002315
ø 4.3 mm	–	–	MC-Analog-SW-GL-4.3
Art-No.:	–	–	ZFX15002316
ø 4.8 mm	–	–	MC-Analog-SW-GL-4.8
Art-No.:	–	–	ZFX15002317
ø 5.5 mm	–	–	MC-Analog-SW-GL-5.5
Art-No.:	–	–	ZFX15002318

Screwdriver

	Standard screw	***Hexalobular screw***	***Scan bodies***
ø 3.8 mm	FUJI	–	FUJI
ø 4.3 mm	FUJI	–	FUJI
ø 4.8 mm	FUJI	–	FUJI
ø 5.5 mm	FUJI	–	FUJI

Ordering information for screwdrivers from page 8

*max. possible screw channel angle

SW-OU Type fitting Sweden & Martina Outlink2® implant system

Scan bodies

	Desktop scan body *including standard screw*	***IOS scan body H4*** *including standard screw*	***IOS scan body H7*** *including standard screw*
	TWIN PACK	TWIN PACK	TWIN PACK
ø 3.3 mm	EVO-SW-OU-MACH-3.3	INTRA-SW-OU-MACH-3.3-H4	INTRA-SW-OU-MACH-3.3-H7
Art-No.:	ZFX05002265	ZFX05001142	ZFX05001143
ø 4.1 mm	EVO-SW-OU-SP-MACH-4.1	INTRA-SW-OU-SP-MACH-4.1-H4	INTRA-SW-OU-SP-MACH-4.1-H7
Art-No.:	ZFX05002266	ZFX05001146	ZFX05001147
ø 3.75 / 4.1 mm	EVO-SW-OU-MACH-3.75-4.1	INTRA-SW-OU-MACH-3.75-4.1-H4	INTRA-SW-OU-MACH-3.75-4.1-H7
Art-No.:	ZFX05002267	ZFX05001144	ZFX05001145
ø 5.0 mm	EVO-SW-OU-MACH-5.0	INTRA-SW-OU-MACH-5.0-H4	INTRA-SW-OU-MACH-5.0-H7
Art-No.:	ZFX05002268	ZFX05001148	ZFX05001149

Components Accessories

	Pre-Abutment Blank	***Replacement screw***	***Model analog***
			TWIN PACK
ø 3.3 mm	–	–	MC-Analog-SW-OU-3.3
Art-No.:	–	–	ZFX15002319
ø 4.1 mm	–	–	MC-Analog-SW-OU-SP-4.1
Art-No.:	–	–	ZFX15002320
ø 3.75 / 4.1 mm	–	–	MC-Analog-SW-OU-3.75-4.1
Art-No.:	–	–	ZFX15002321
ø 5.0 mm	–	–	MC-Analog-SW-OU-5.0
Art-No.:	–	–	ZFX15002322

Screwdriver

	Standard screw	***Hexalobular screw***	***Scan bodies***
ø 3.3 mm	FUJI	–	FUJI
ø 4.1 mm	FUJI	–	FUJI
ø 3.75 / 4.1 mm	FUJI	–	FUJI
ø 5.0 mm	FUJI	–	FUJI

Ordering information for screwdrivers from page 8

SW-PR Type fitting Sweden & Martina Premium Kohno® implant system

Scan bodies

	Desktop scan body *including standard screw*	***IOS scan body H4*** *including standard screw*	***IOS scan body H7*** *including standard screw*
	TWIN PACK	TWIN PACK	TWIN PACK
ø 3.3 mm	EVO-SW-PR-MACH-3.3	INTRA-SW-PR-MACH-3.3-H4	INTRA-SW-PR-MACH-3.3-H7
Art-No.:	ZFX05002251	ZFX05001114	ZFX05001115
ø 3.8 mm	EVO-SW-PR-MACH-3.8	INTRA-SW-PR-MACH-3.8-H4	INTRA-SW-PR-MACH-3.8-H7
Art-No.:	ZFX05002252	ZFX05001116	ZFX05001117
ø 4.25 mm	EVO-SW-PR-MACH-4.25	INTRA-SW-PR-MACH-4.25-H4	INTRA-SW-PR-MACH-4.25-H7
Art-No.:	ZFX05002253	ZFX05001118	ZFX05001119
ø 5.0 mm	EVO-SW-PR-MACH-5.0	INTRA-SW-PR-MACH-5.0-H4	INTRA-SW-PR-MACH-5.0-H7
Art-No.:	ZFX05002254	ZFX05001120	ZFX05001121
ø 6.0 mm	EVO-SW-PR-MACH-6.0	INTRA-SW-PR-MACH-6.0-H4	INTRA-SW-PR-MACH-6.0-H7
Art-No.:	ZFX05002255	ZFX05001122	ZFX05001123

Components Accessories

	Pre-Abutment Blank	***Replacement screw***	***Model analog***
			TWIN PACK
ø 3.3 mm	–	–	MC-Analog-SW-PR-3.3
Art-No.:	–	–	ZFX15002310
ø 3.8 mm	–	–	MC-Analog-SW-PR-3.8
Art-No.:	–	–	ZFX15002311
ø 4.25 mm	–	–	MC-Analog-SW-PR-4.25
Art-No.:	–	–	ZFX15002312
ø 5.0 mm	–	–	MC-Analog-SW-PR-5.0
Art-No.:	–	–	ZFX15002313
ø 6.0 mm	–	–	MC-Analog-SW-PR-6.0
Art-No.:	–	–	ZFX15002314

*max. possible screw channel angle

Screwdriver

	Standard screw	Hexalobular screw	Scan bodies
ø 3.3 mm	FUJI	–	FUJI
ø 3.8 mm	FUJI	–	FUJI
ø 4.25 mm	FUJI	–	FUJI
ø 5.0 mm	FUJI	–	FUJI
ø 6.0 mm	FUJI	–	FUJI

Ordering information for screwdrivers from page 8

TH-SP Type fitting Thommen Medical SPI® implant system

Scan bodies

	Desktop scan body *including standard screw*	***IOS scan body H4*** *including standard screw*	***IOS scan body H7*** *including standard screw*
	TWIN PACK	TWIN PACK	TWIN PACK
ø 3.5 mm	EVO-TH-SP-MACH-3.5	INTRA-TH-SP-MACH-3.5-H4	INTRA-TH-SP-MACH-3.5-H7
Art-No.:	ZFX05002246	ZFX05001104	ZFX05001105
ø 4.0 mm	EVO-TH-SP-MACH-4.0	INTRA-TH-SP-MACH-4.0-H4	INTRA-TH-SP-MACH-4.0-H7
Art-No.:	ZFX05002247	ZFX05001106	ZFX05001107
ø 4.5 mm	EVO-TH-SP-MACH-4.5	INTRA-TH-SP-MACH-4.5-H4	INTRA-TH-SP-MACH-4.5-H7
Art-No.:	ZFX05002248	ZFX05001108	ZFX05001109
ø 5.0 mm	EVO-TH-SP-MACH-5.0	INTRA-TH-SP-MACH-5.0-H4	INTRA-TH-SP-MACH-5.0-H7
Art-No.:	ZFX05002249	ZFX05001110	ZFX05001111
ø 6.0 mm	EVO-TH-SP-MACH-6.0	INTRA-TH-SP-MACH-6.0-H4	INTRA-TH-SP-MACH-6.0-H7
Art-No.:	ZFX05002250	ZFX05001112	ZFX05001113

Components Accessories

	Pre-Abutment Blank	***Replacement screw***	***Model analog***
			TWIN PACK
ø 3.5 mm	–	–	MC-Analog-TH-SP-3.5
Art-No.:	–	–	ZFX15002284
ø 4.0 mm	–	–	MC-Analog-TH-SP-4.0
Art-No.:	–	–	ZFX15002285
ø 4.5 mm	–	–	MC-Analog-TH-SP-4.5
Art-No.:	–	–	ZFX15002286
ø 5.0 mm	–	–	MC-Analog-TH-SP-5.0
Art-No.:	–	–	ZFX15002287
ø 6.0 mm	–	–	MC-Analog-TH-SP-6.0
Art-No.:	–	–	ZFX15002288

*max. possible screw channel angle

** Directly screw-retained prosthetics; no angulation possible

Component accessory for directly screwed prosthetics

	Standard screw*		Hexalobular screw	
	0°*	T Torque	≤ 25°*	T Torque
ø 3.5 mm	TH-SP-SCTI-3.5	15 Ncm	TI-Screw-TH-SP-3.5	15 Ncm
Art-No.:	ZFX09002251		ZFX09-TH-SP-35	
ø 4.0 mm	TH-SP-SCTI-4.0-6.0	25 Ncm	TI-Screw-TH-SP-4.0-5.0	25 Ncm
Art-No.:	ZFX09002250		ZFX09-TH-SP-4050	
ø 4.5 mm	TH-SP-SCTI-4.0-6.0	25 Ncm	TI-Screw-TH-SP-4.0-5.0	25 Ncm
Art-No.:	ZFX09002250		ZFX09-TH-SP-4050	
ø 5.0 mm	TH-SP-SCTI-4.0-6.0	25 Ncm	TI-Screw-TH-SP-4.0-5.0	25 Ncm
Art-No.:	ZFX09002250		ZFX09-TH-SP-4050	
ø 6.0 mm	TH-SP-SCTI-4.0-6.0	25 Ncm	–	
Art-No.:	ZFX09002250		–	

Screwdriver

	Standard screw**	Hexalobular screw	Scan bodies
ø 3.5 mm	–	MERU	FUJI
ø 4.0 mm	–	MERU	FUJI
ø 4.5 mm	–	MERU	FUJI
ø 5.0 mm	–	MERU	FUJI
ø 6.0 mm	–	MERU	FUJI

Ordering information for screwdrivers from page 8

ORDER AT

order@zfx-dental.com

Zfx GmbH
Kopernikusstraße 15
85221 Dachau, Deutschland
Tel. +49 81 31 33 244 - 0
Fax +49 81 31 33 244 - 10
www.zfx-dental.com

A COMPANY OF ZimVie

1083EN REV. 06/23 ©2023 Zfx GmbH. Subject to errors, misprints and price changes.